Flush Panel

(Vertical Install.)
Installation Guide

Flush Panel

(Vertical Install.)
Installation Guide

- Table of Contents -

Section	Page
General Notes	*i*
Panel Options	*1*
Panel Details	*2*
Base	*3*
Sill	*4*
End Wall	*5*
Outside Corner	*6*
Inside Corner	*7*
Soffit (Front)	*8*
Soffit (Back)	*9*
Soffit End Splice	*10*
End Splice (w/Trim)	*11*
Parapet	*12*
Door/Window (Head)	*13*
Door/Window (Jamb)	*14*
Door/Window (Sill)	*15*
Wall Penetration (3D)	*16*
Wall Penetration	*17*
Rigid Insulation	*18*

©2016 ASC Profiles. All rights reserved.

General Notes

The attached installation details are intended to be a design aid and do not depict all situations. Modifications are the responsibility of the designer/user and should take into account climate conditions such as wind and snow, governing code requirements, and the actual usage and maintenance of the structure.

Applications:

Flush Panel is designed to be a soffit panel, but can also be utilized as a wall panel installed in the vertical or horizontal orientation. It shall not be utilized for roof applications. Flush Panel can be used over solid substrates or over spaced supports. This installation guide depicts panels installed over solid substrate. Details for panels installed over spaced supports would be similar.

Flashings:

Where possible, flashings should be lapped away from prevailing winds. Certain flashings should be supported if it is likely that equipment
(ladder, etc.) will be used against them. Check with AEP Span any time you intend to specify a prefinished flashing in a gauge or finish different than with Flush Panel. It is good practice to specify that all flashings be of the same material (gauge, color, finish) as the roof panels to ensure long-term durability. Field-painted flashings rarely equal the durability and colorfastness of factory baked-on paint systems. The enclosed details have minimized the use of exposed fasteners where possible. The edges of flashings have also been shown hemmed to strengthen and to minimize the exposure of cut edges.

Flashing design and fabrication is generally the responsibility of the contractor. For convenience, we have provided some typical flashing drawings on our website at
www.aepspan.com/files/Arch_Trims_Flashings.pdf

Applicable Flush Panel flashing part numbers are referenced within this installation guide. Note that flashing shapes and dimensions may vary greatly based on project requirements. Installation details and flashings referenced within are for general design guidance only.

Condensation, Insulation, & Ventilation:

It is the designer's responsibility to determine the need and composition of condensation control materials including insulation and vapor retarders, as well as ventilation requirements. Metal wall products are susceptible to condensation and its control should be carefully considered.

Thermal Movement:

Both panels and flashings must allow for thermal movement (expansion and contraction) of the materials, especially where long lengths are used. Appropriate gaps or other provisions must be provided to accommodate thermal movement.

Oil Canning:

Flat metal surfaces often display waviness commonly referred to as 'oil canning'. This can be caused by variations in raw material, processing variations, product handling, or variations in the installation substrate. Oil canning is a characteristic, not a defect, of panels manufactured from light-gauge metal. To reduce potential for oil canning, substrates should not deviate from a flat plane more than 1/4 inch in 20 feet, or 1/8 inch in 5 feet. Oil canning is not a cause for panel rejection. Additional technical information is available upon request.

References:

The Sheet Metal and Air Conditioning Contractors' National Association Inc. (SMACNA) manual is an excellent reference for sheet metal contractors. It's guidelines for underlayments, gutter and downspout size requirements, and expansion/contraction of metals and flashing joints should be followed.

Technical Assistance:

Contact your AEP Span Sales Representative for additional information.

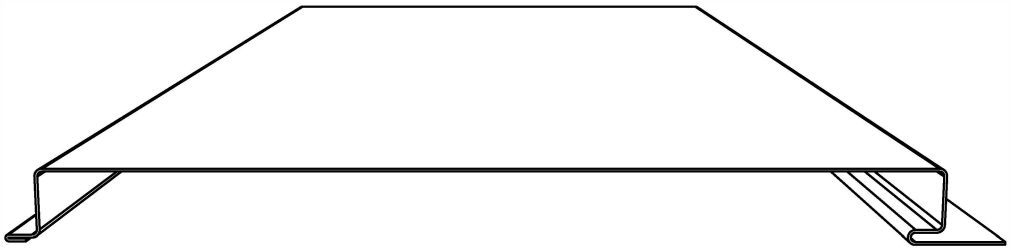

FLUSH PANEL OPTIONS:

- FLAT FINISH
- 1 RIB (CENTERED)
- 2 RIBS (SPACED 4")

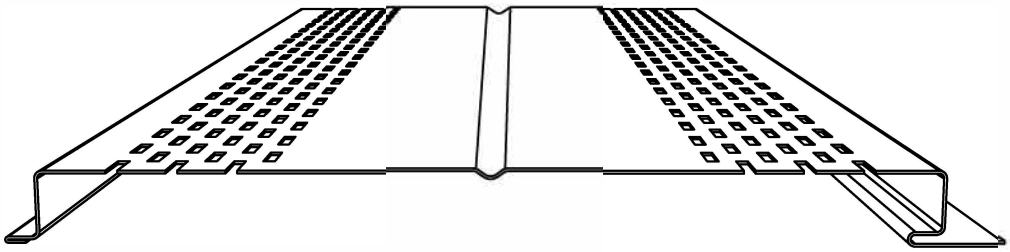

FLUSH PANEL (VENTED) OPTIONS:

- 7.8% OPEN AREA
  (11.23IN^2/SQ-FT OPEN AREA
- WITH 1 RIB (CENTERED)
- WITH 2 RIBS (SPACED 4")

AVAILABLE MATERIALS:
STEEL: 20, 22, 24, & 26GA

NOTE: 26GA PANELS REQUIRE 1 OR 2 RIBS.
VENTED PANELS REQUIRE 1 OR 2 RIBS.

NOTE:
PANEL OPTIONS
SUBJECT TO CHANGE.

AEP SPAN®

FLUSH PANEL
VERTICAL INSTALL.

PANEL OPTIONS

index

FPV-01

REV. 9/23/16

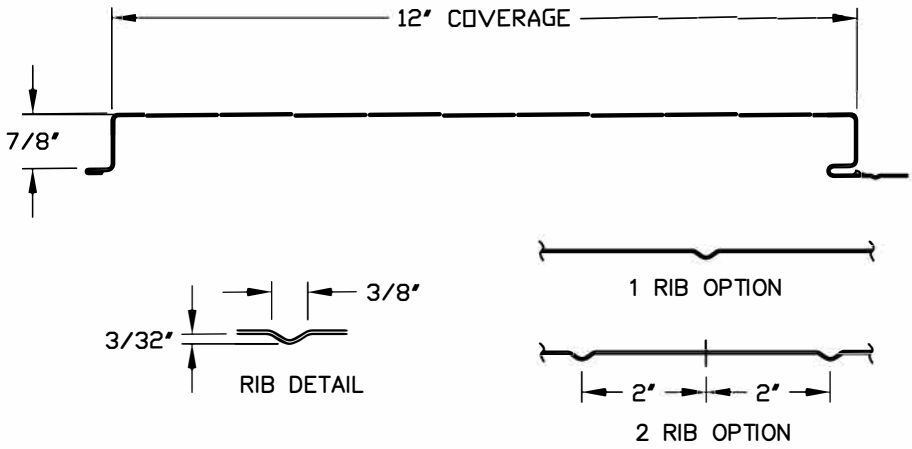

FLUSH PANEL

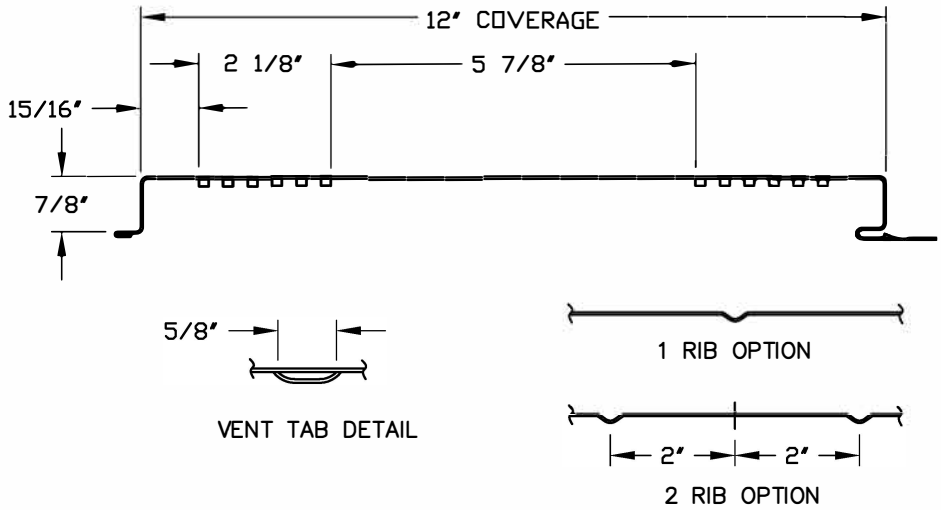

VENTED FLUSH PANEL

AEP SPAN®

FLUSH PANEL
VERTICAL INSTALL.

PANEL DETAILS

index

FPV-02

REV. 9/23/16

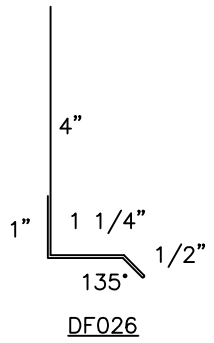

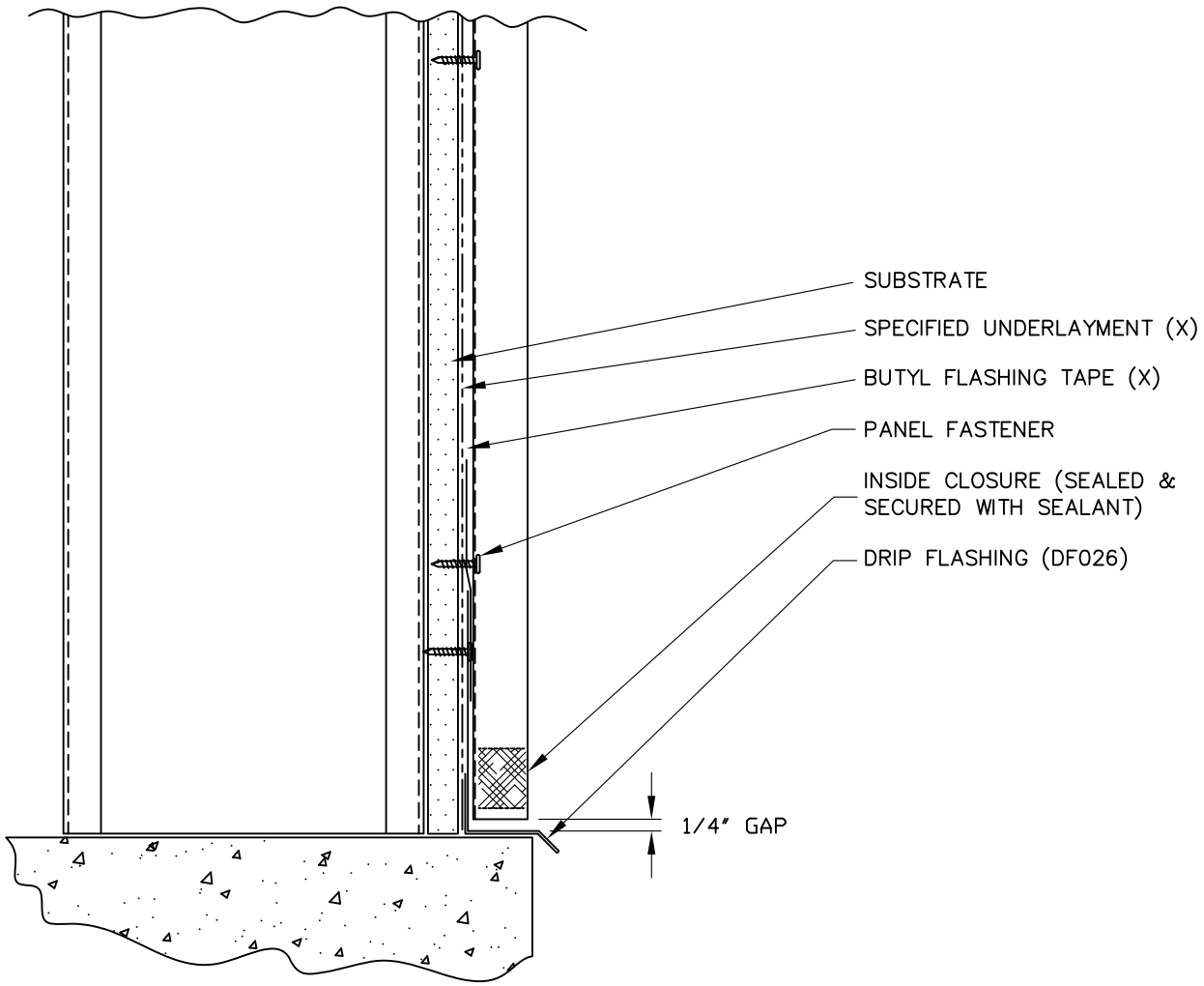

(X) – NOT BY AEP SPAN

AEP SPAN®

FLUSH PANEL
VERTICAL INSTALL.

BASE

index

FPV-03

REV. 9/23/16

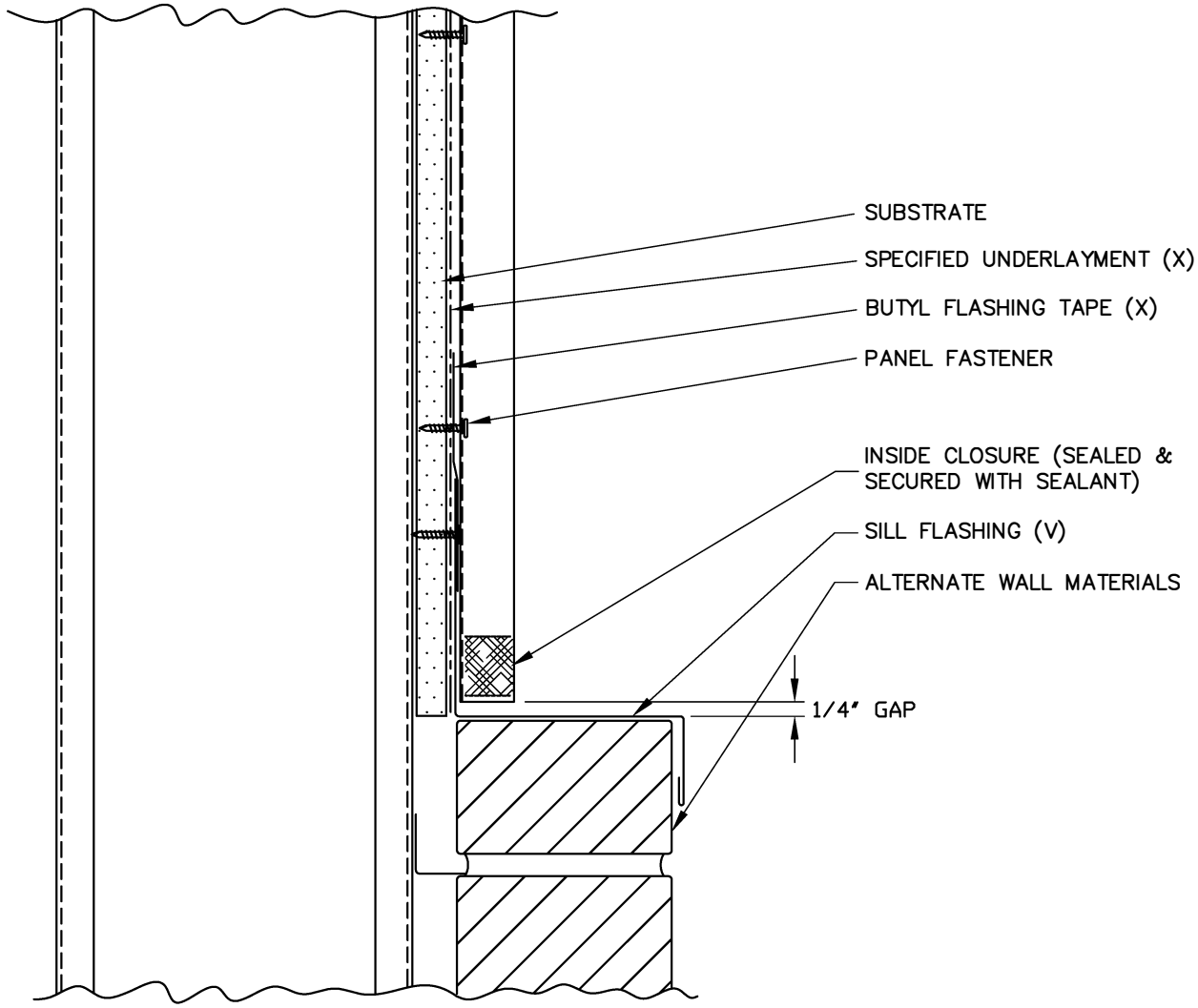

(X) – NOT BY AEP SPAN
(V) – DIMENSIONS VARY BASED ON PROJECT CONDITIONS

AEP SPAN®

FLUSH PANEL
VERTICAL INSTALL.

SILL

FPV-04

REV. 9/23/16

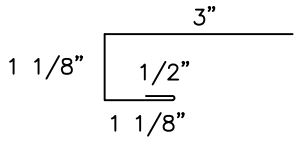

JT108

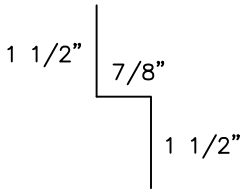

ZC225

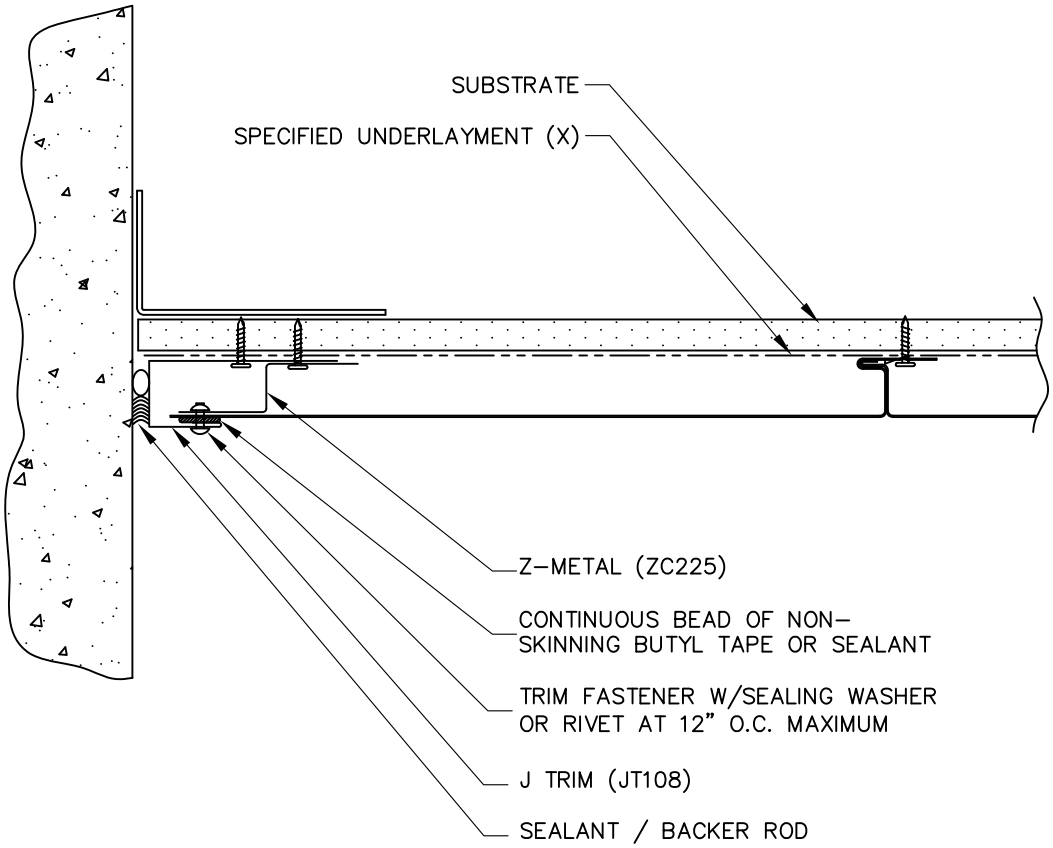

(X) – NOT BY AEP SPAN

AEP SPAN®

FLUSH PANEL
VERTICAL INSTALL.

END WALL

FPV-05

REV. 9/23/16

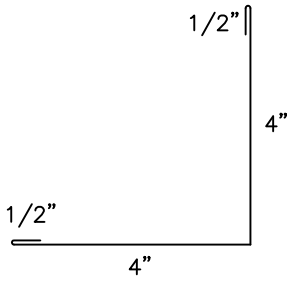

OC111

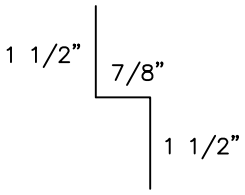

ZC225

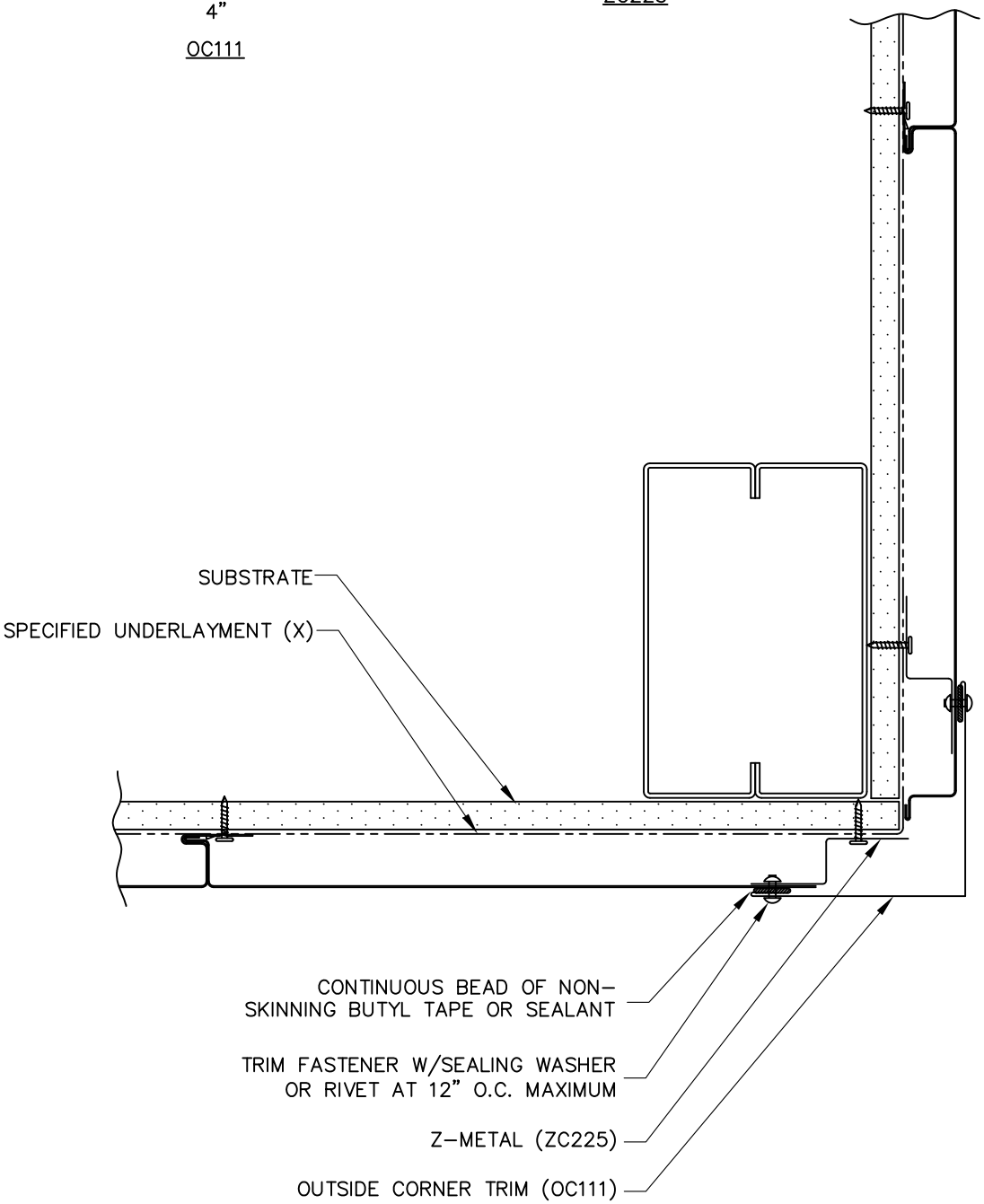

(X) – NOT BY AEP SPAN

AEP SPAN®

FLUSH PANEL
VERTICAL INSTALL.

OUTSIDE CORNER

index

FPV-06

REV. 9/23/16

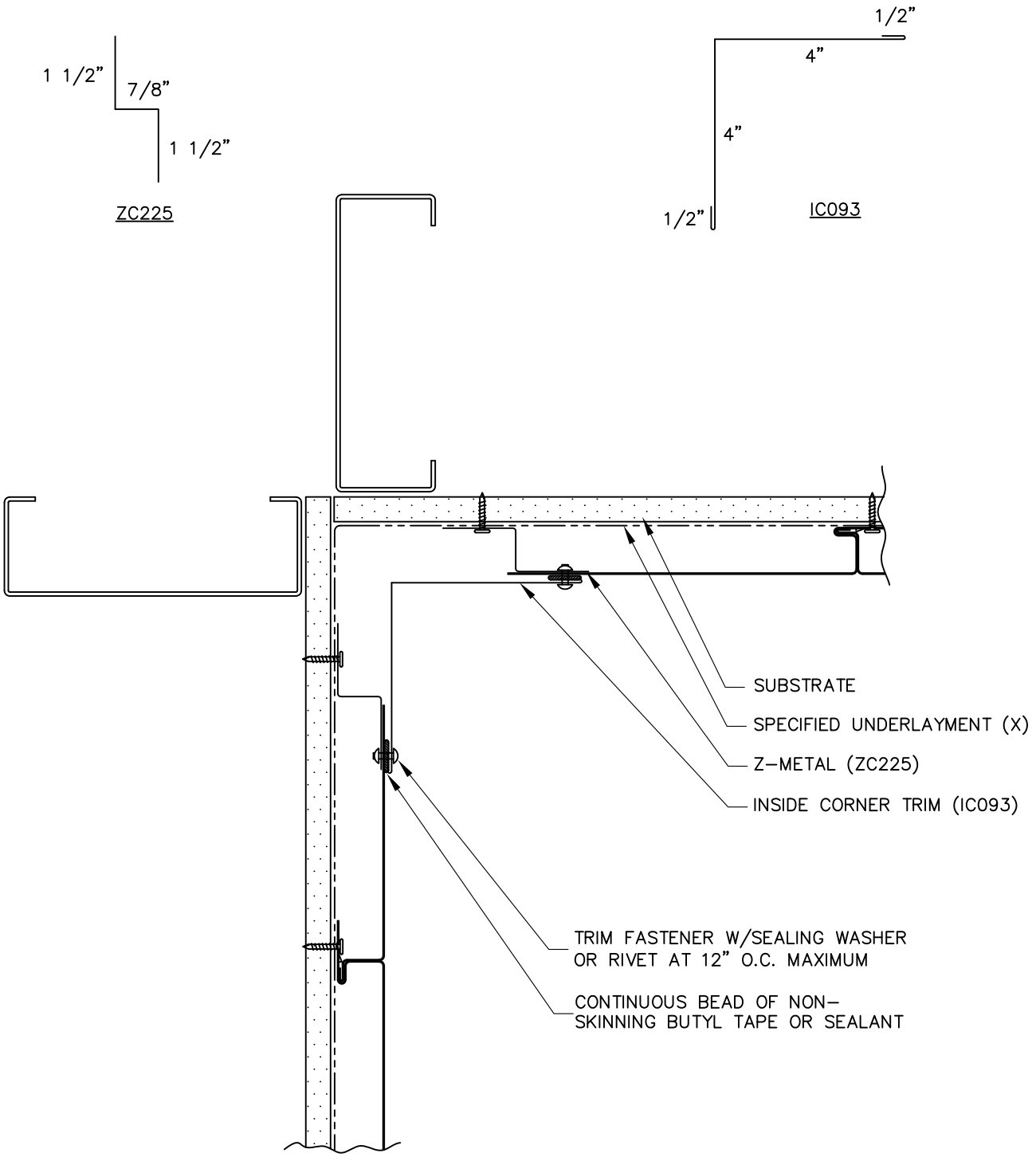

(X) – NOT BY AEP SPAN

AEP SPAN®

FLUSH PANEL
VERTICAL INSTALL.

INSIDE CORNER

index

FPV-07

REV. 9/23/16

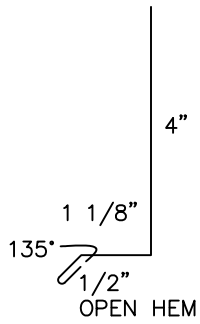

DF032

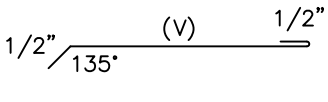

COVER TRIM

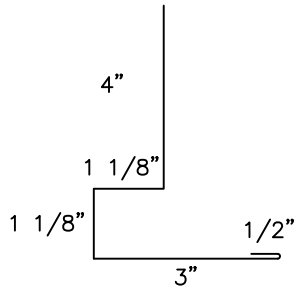

DF018

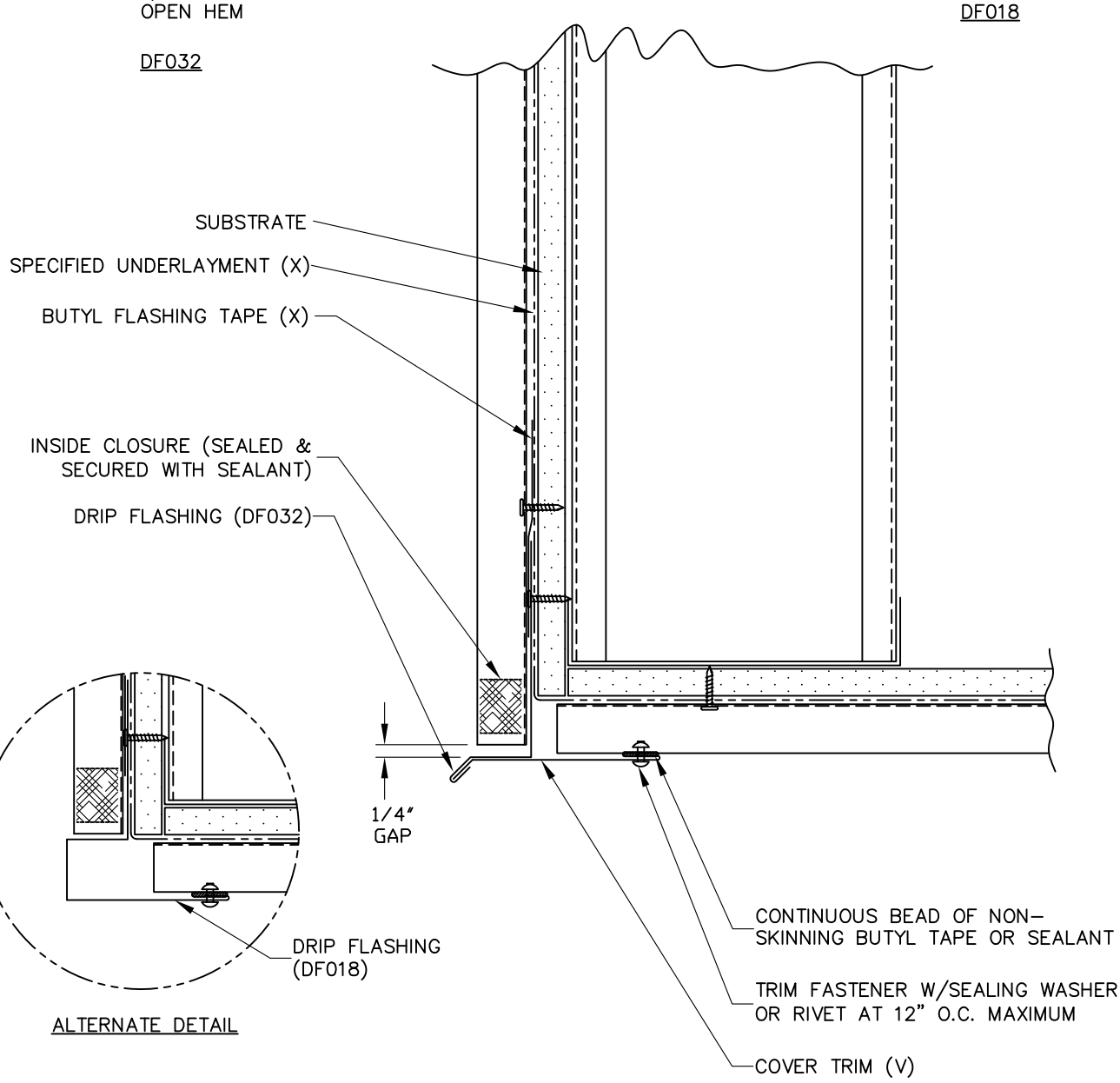

ALTERNATE DETAIL

(X) – NOT BY AEP SPAN
(V) – DIMENSIONS VARY BASED ON PROJECT CONDITIONS

AEP SPAN®

FLUSH PANEL
VERTICAL INSTALL.

SOFFIT (FRONT)

FPV-08

REV. 9/23/16

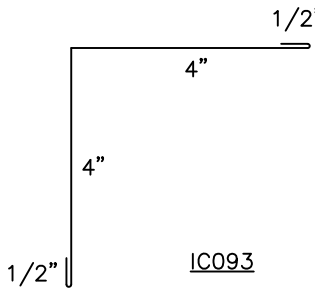

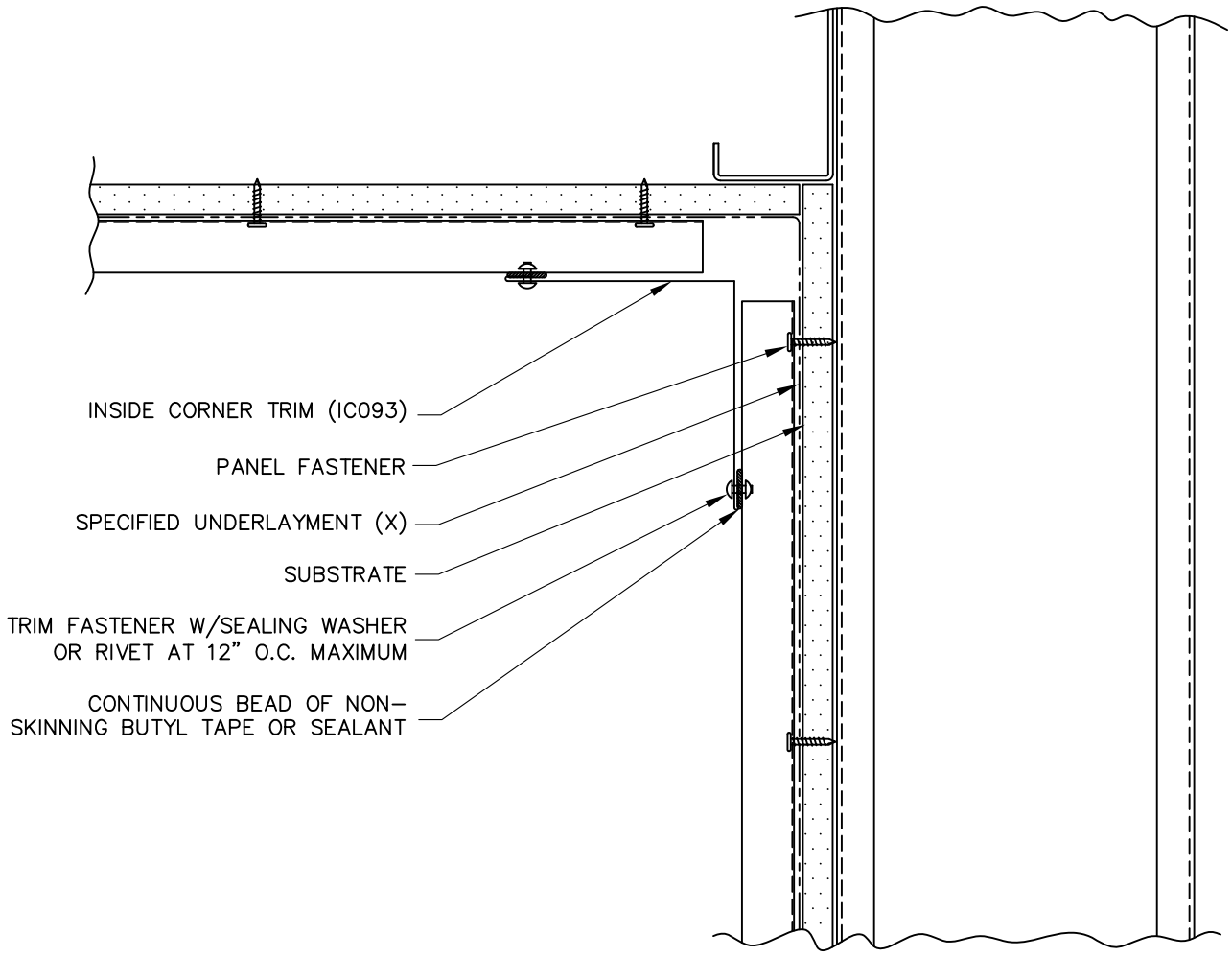

(X) – NOT BY AEP SPAN

AEP SPAN®

FLUSH PANEL
VERTICAL INSTALL.

SOFFIT (BACK)

index

FPV-09

REV. 9/23/16

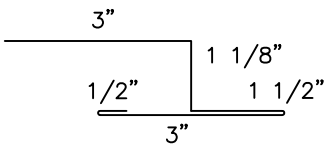

MT110

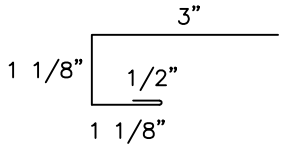

JT108

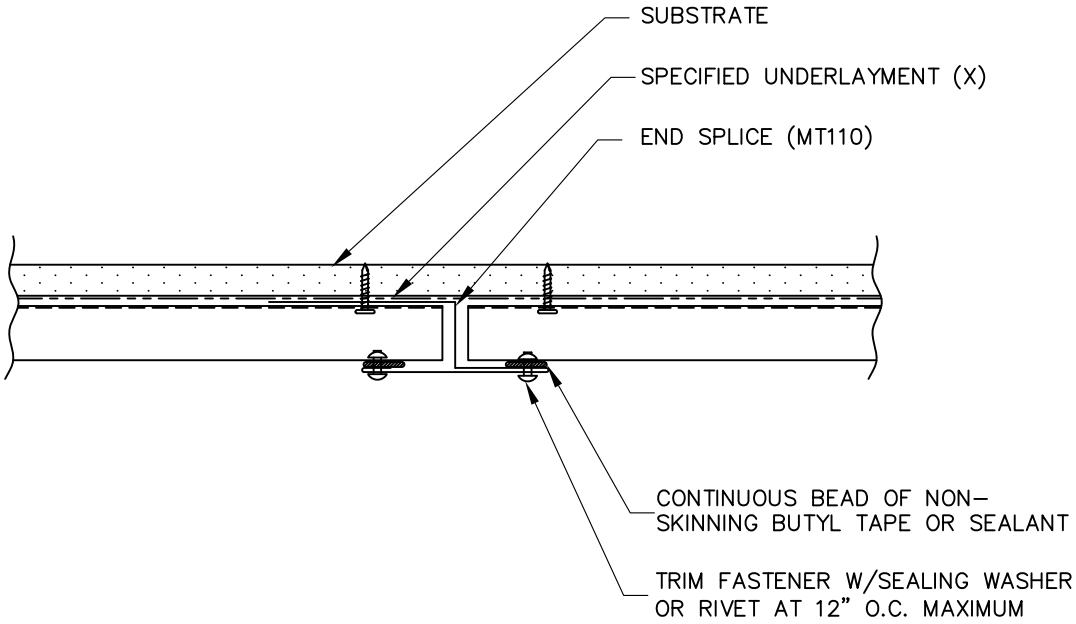

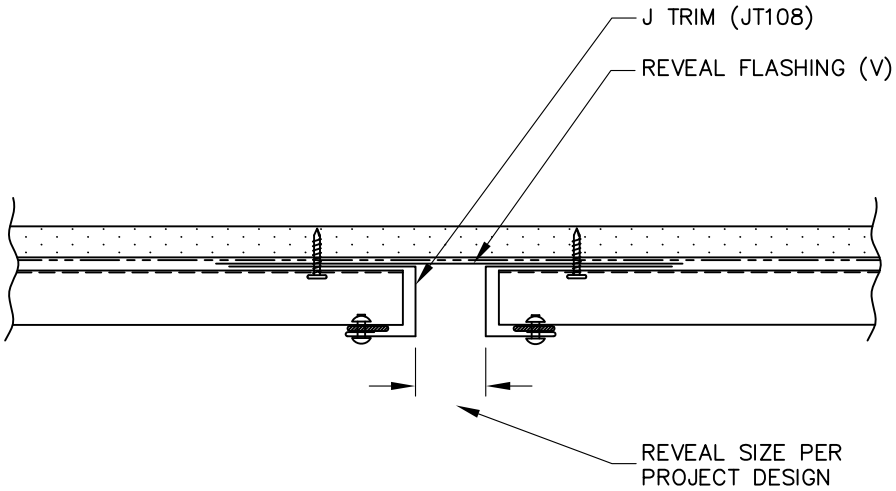

ALTERNATE DETAIL

(X) – NOT BY AEP SPAN
(V) – DIMENSIONS VARY BASED ON PROJECT CONDITIONS

AEP SPAN®

FLUSH PANEL
VERTICAL INSTALL.

SOFFIT END SPLICE

FPV-10

REV. 9/23/16

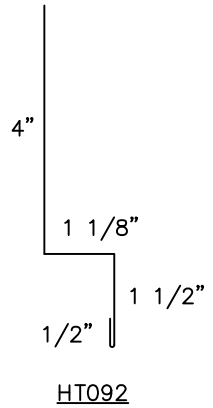

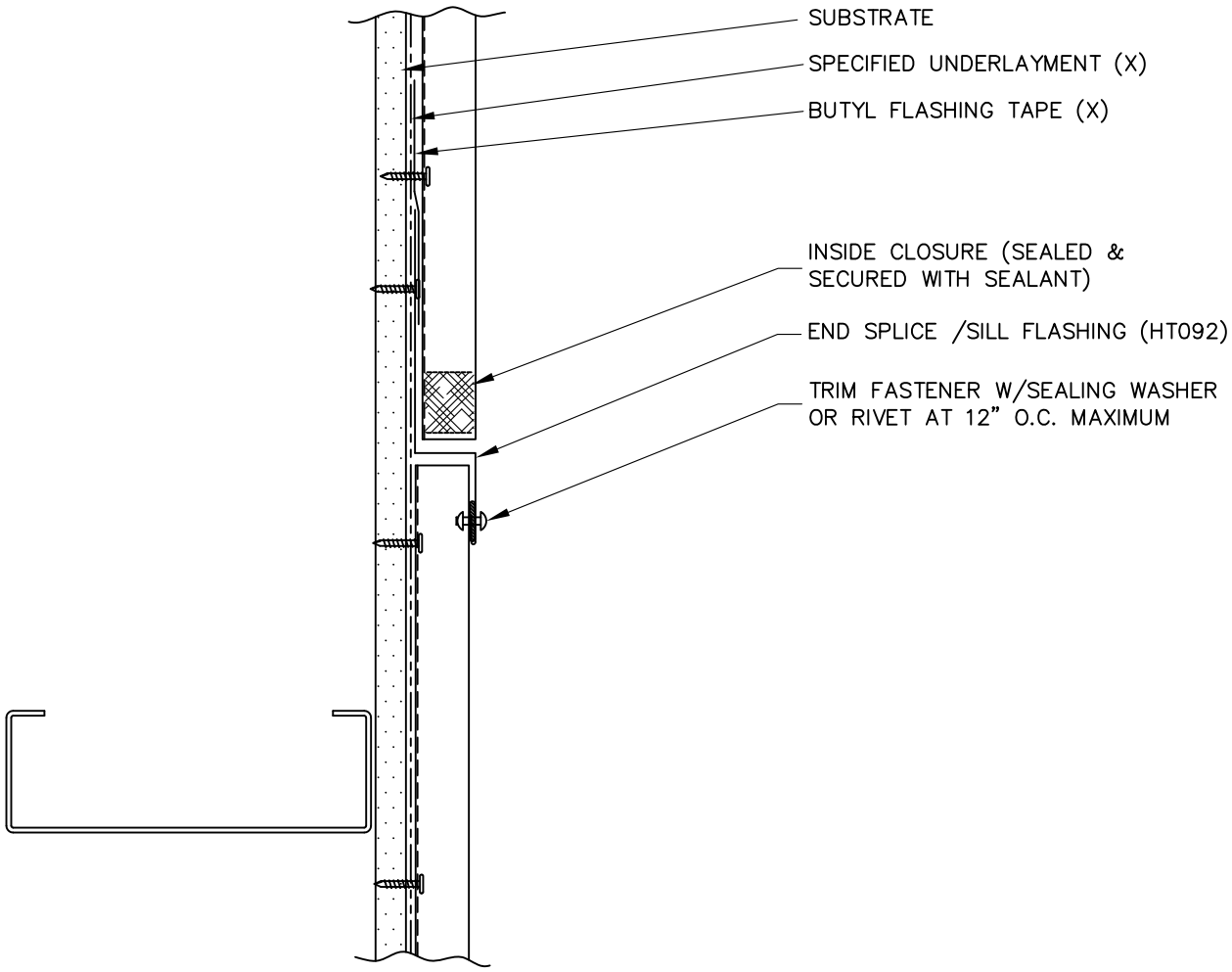

(X) – NOT BY AEP SPAN

AEP SPAN®

FLUSH PANEL
VERTICAL INSTALL.

END SPLICE (W/TRIM)

index

FPV-11

REV. 9/23/16

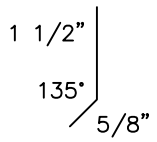

TC209

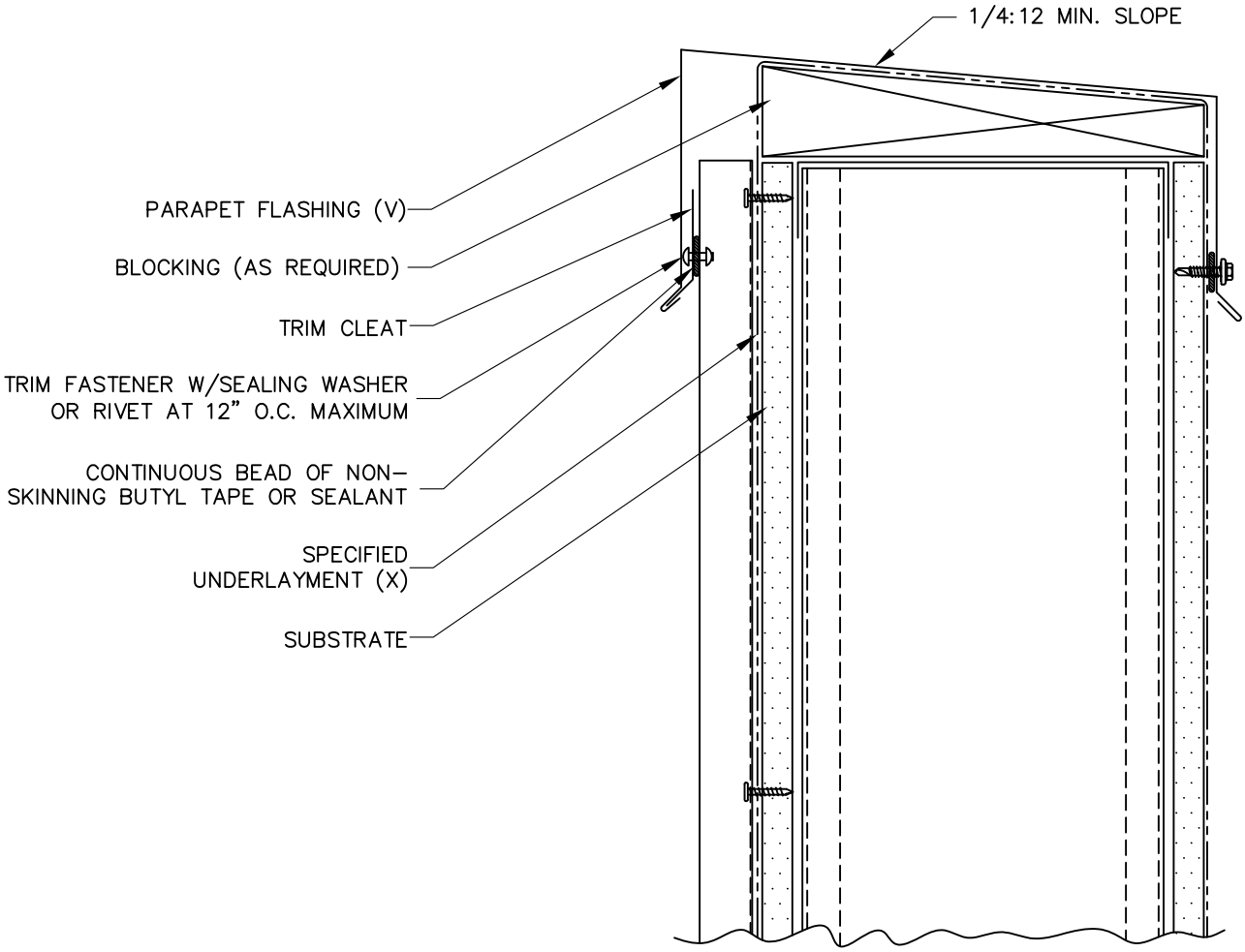

(X) – NOT BY AEP SPAN
(V) – DIMENSIONS VARY BASED ON PROJECT CONDITIONS

AEP SPAN®

FLUSH PANEL
VERTICAL INSTALL.

PARAPET

index

FPV-12

REV. 11/16/18

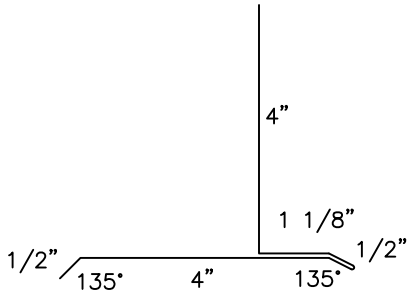

HT093

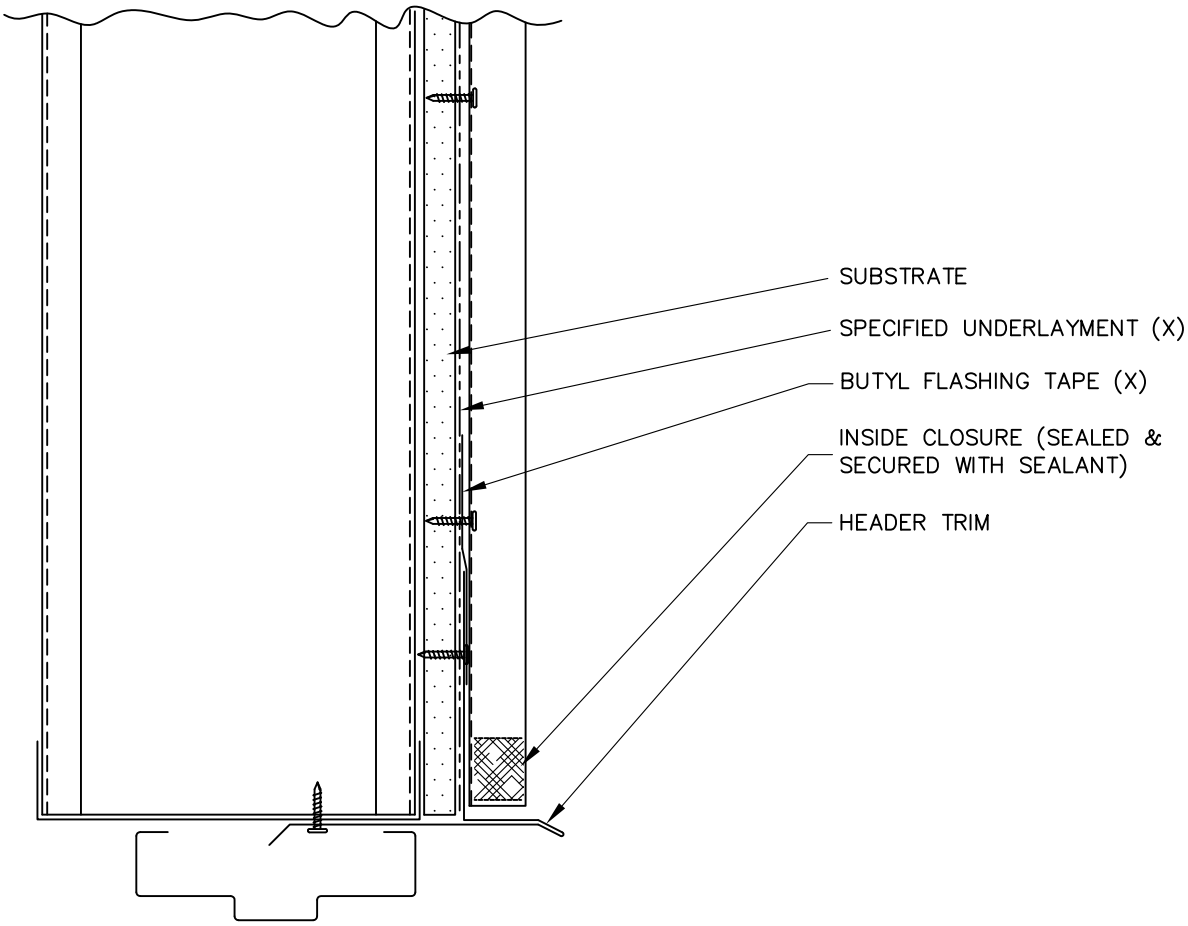

(X) – NOT BY AEP SPAN

AEP SPAN®

FLUSH PANEL
VERTICAL INSTALL.

DOOR / WINDOW (HEAD)

index

FPV-13

REV. 9/23/16

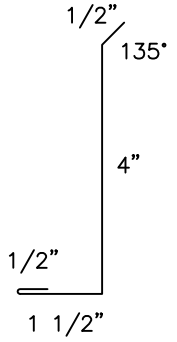

WC217

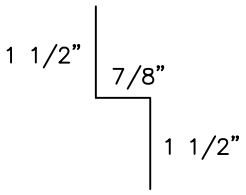

ZC225

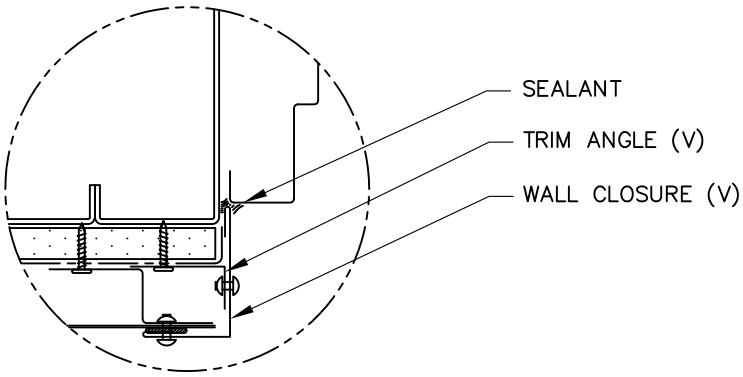

ALTERNATE DETAIL

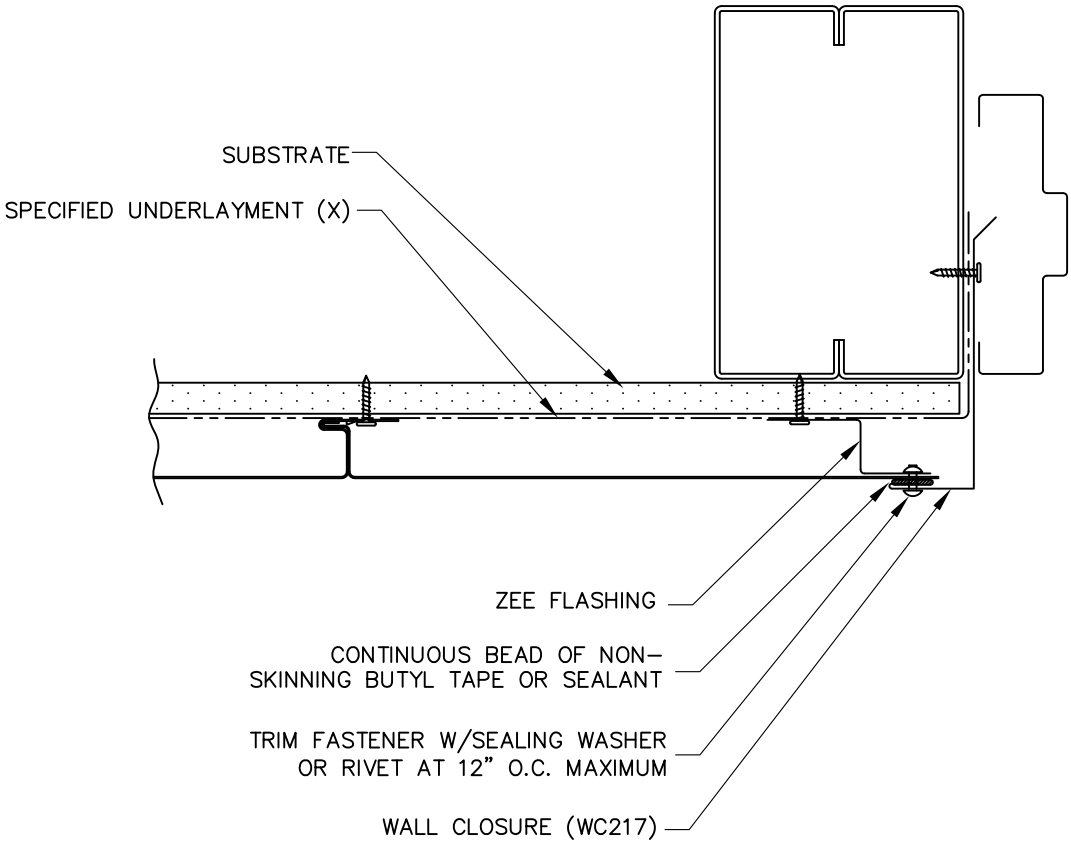

(X) – NOT BY AEP SPAN
(V) – DIMENSIONS VARY BASED ON PROJECT CONDITIONS

AEP SPAN®

FLUSH PANEL
VERTICAL INSTALL.

DOOR / WINDOW
(JAMB)

index

FPV-14

REV. 9/23/16

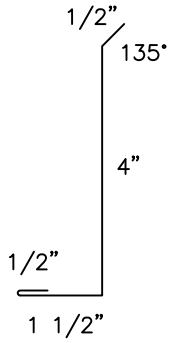

WC217

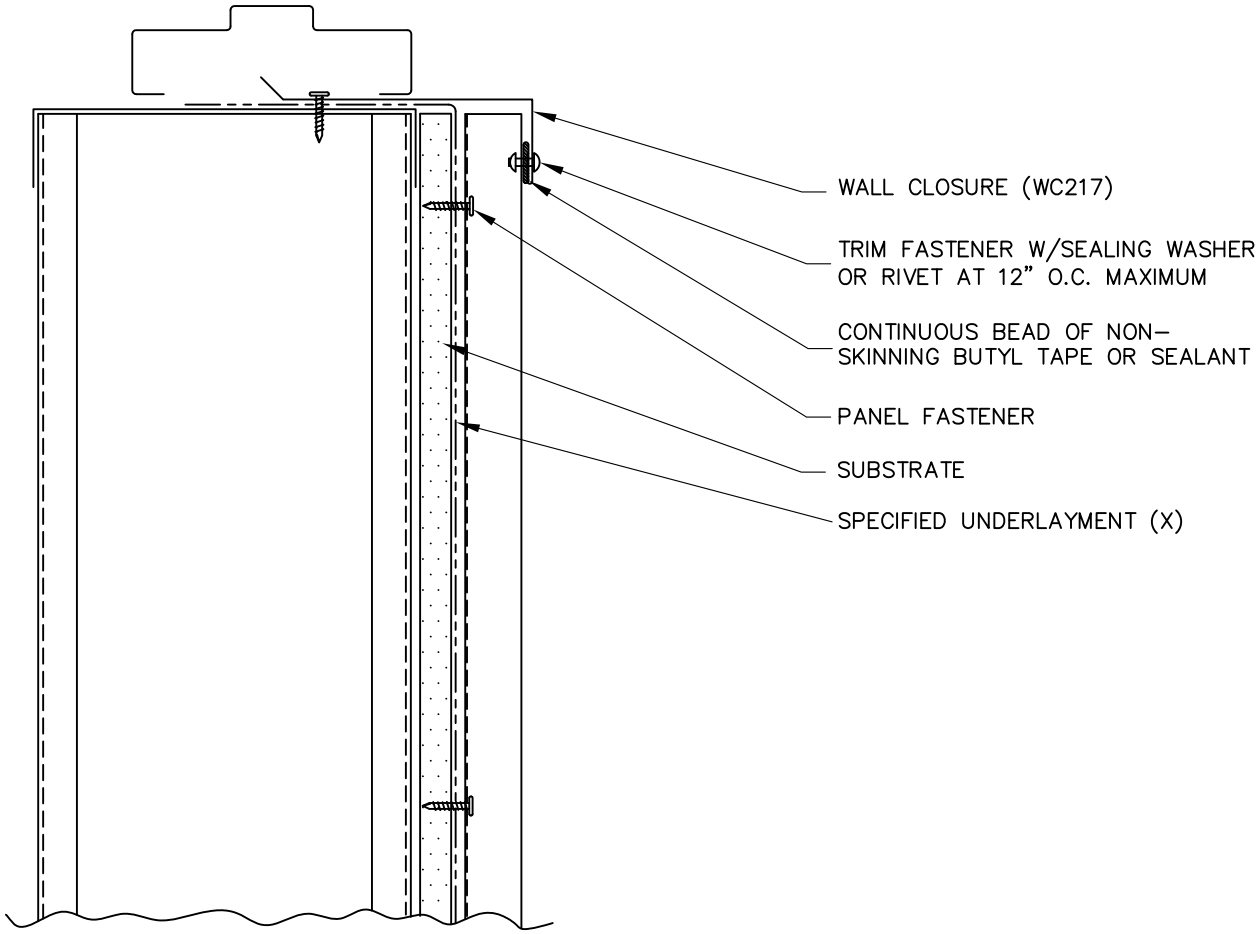

(X) – NOT BY AEP SPAN

AEP SPAN®

FLUSH PANEL
VERTICAL INSTALL.

DOOR / WINDOW
(SILL)

index

FPV-15

REV. 9/23/16

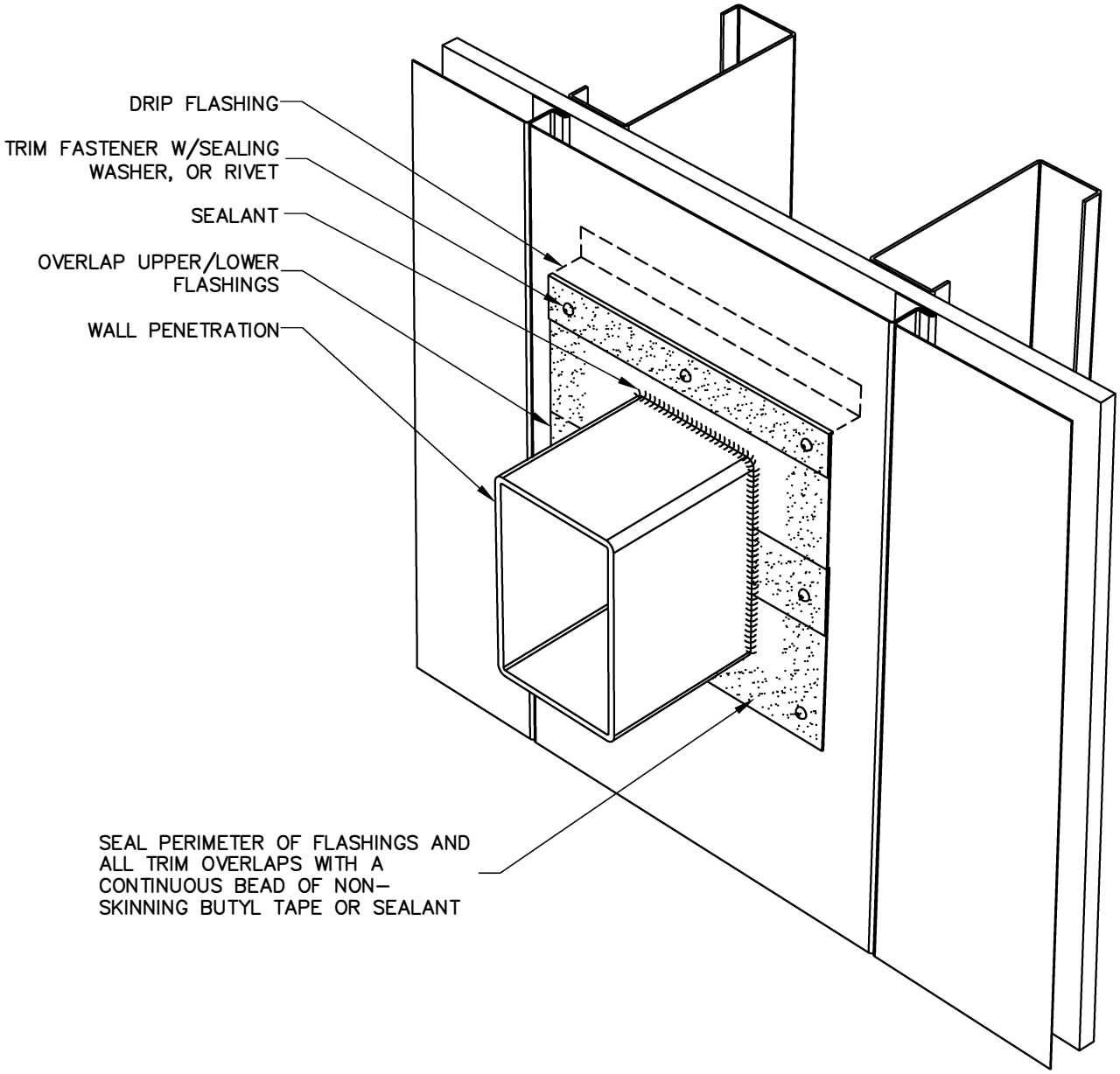

AEP SPAN®

FLUSH PANEL
VERTICAL INSTALL.

WALL PENETRATION (3D)

index

FPV-16

REV. 9/23/16

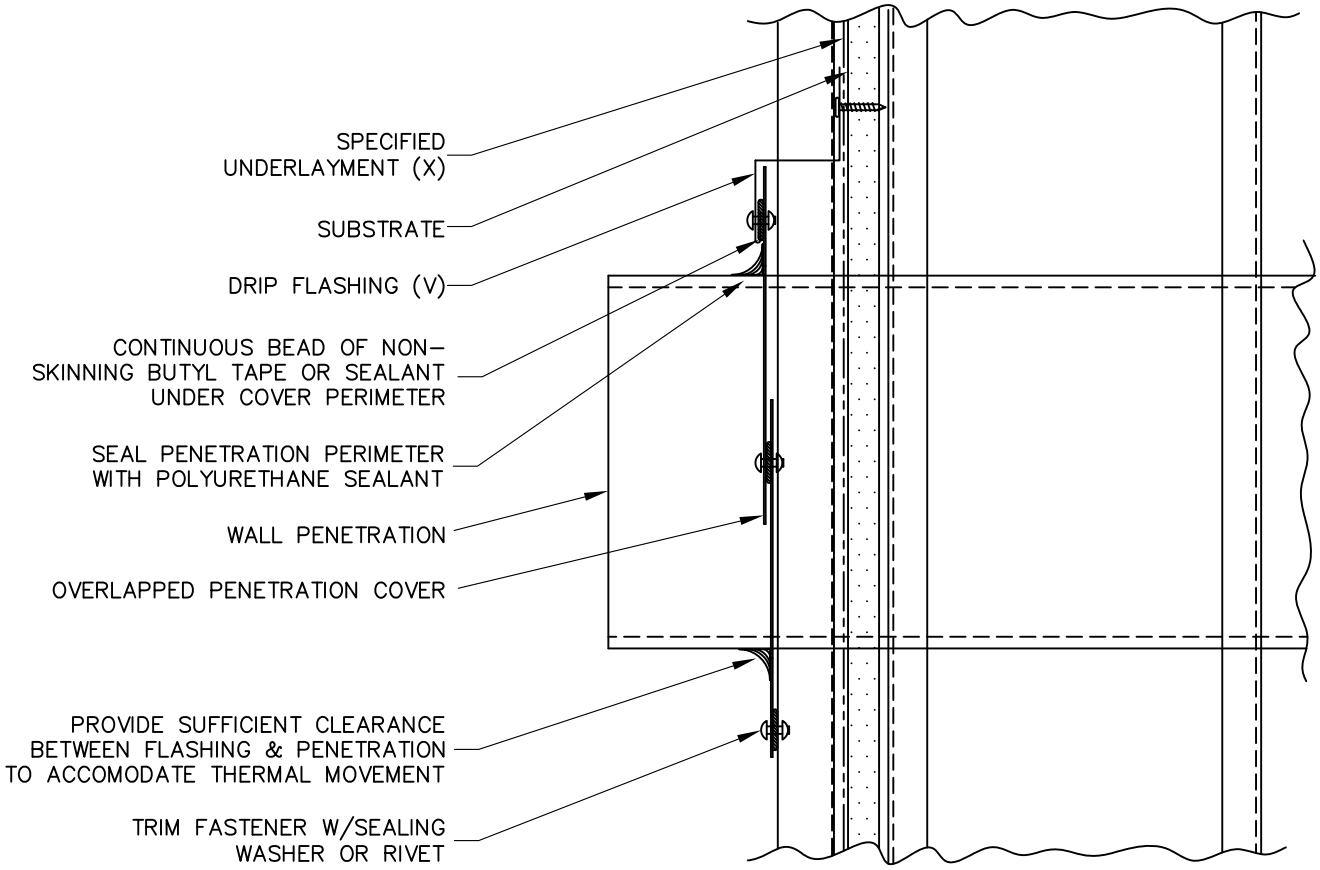

(X) – NOT BY AEP SPAN
(V) – DIMENSIONS VARY BASED ON PROJECT CONDITIONS

AEP SPAN®

FLUSH PANEL
VERTICAL INSTALL.

WALL PENETRATION

FPV-17

REV. 9/23/16

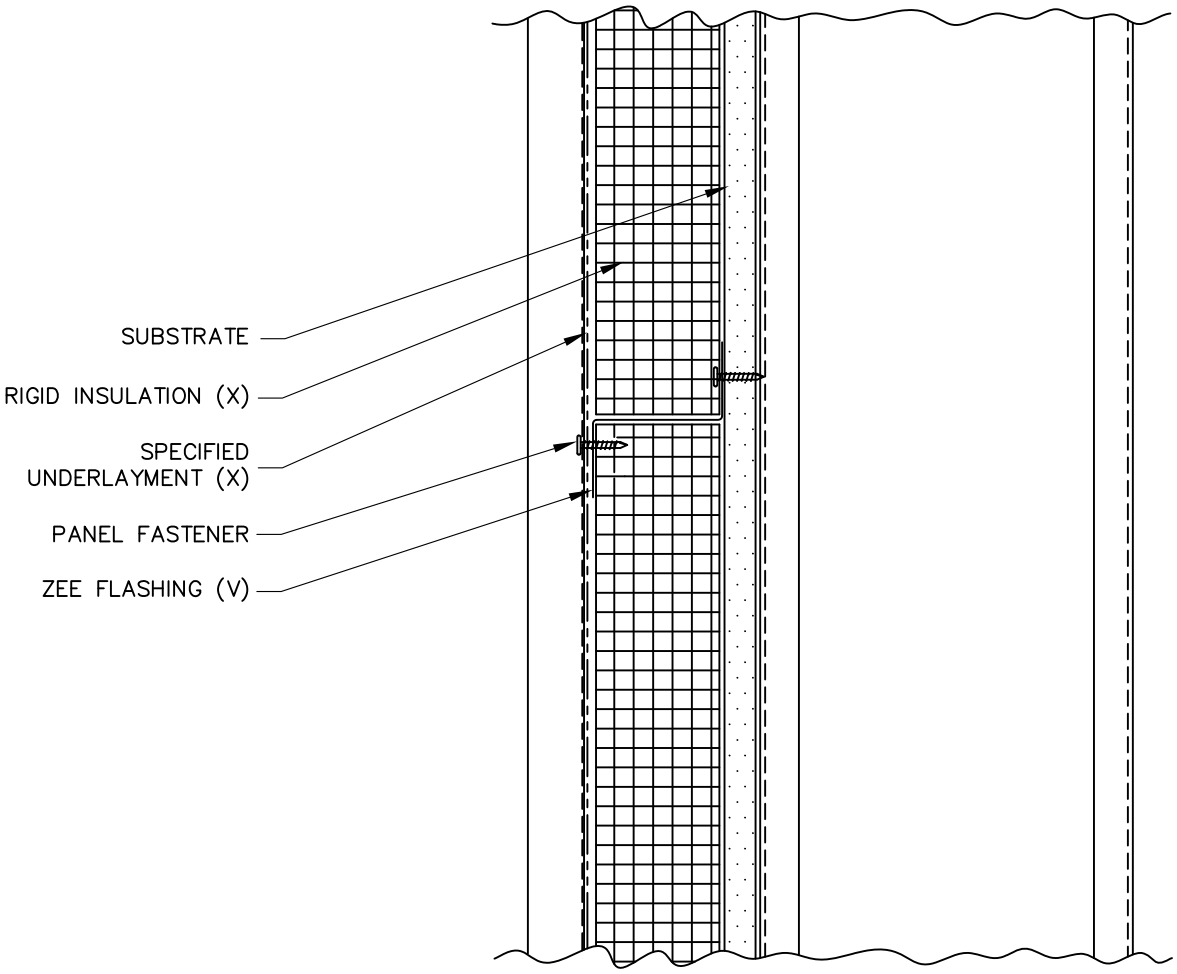

(X) – NOT BY AEP SPAN
(V) – DIMENSIONS AND GAGE VARY BASED ON PROJECT CONDITIONS

AEP SPAN®

FLUSH PANEL
VERTICAL INSTALL.

RIGID INSULATION

index

FPV-18

REV. 9/23/16

MANUFACTURING FACILITY:

Tacoma, Washington
2141 Milwaukee Way
Tacoma, WA 98421

CORPORATE HEADQUARTERS:

ASC Profiles LLC
2110 Enterprise Boulevard
West Sacramento, CA 95691

CUSTOMER SERVICE:
800-733-4955

Visit us at:
www.aepspan.com

©2022 ASC Profiles LLC. All rights reserved.