Select Seam

Wide Batten Installation Guide

Select Seam®

Wide Batten Installation Guide

- Table of Contents -

Section	Page
General Notes	i
Panel Information	1
Clip Information	2
Eave	3
Eave Hem	4
Fascia Transition	5
Gable (Rake)	6
Side Wall (Rake Wall)	7
Ridge / Hip	8
Head Wall	9
High Eave	10
Slope Transition	11
Valley	12
Panel Lap	13
Batten Lap	14
Roof Penetrations	15
Roof Curb (Side Wall Flashing)	16
Roof Curb (Uphill / Downhill Flashing)	17
Snow Drag Loads	Appendix A
Drag Load Resistance	Appendix B

©2012 ASC Profiles LLC. All rights reserved. May12

General Notes

The attached installation details are intended to be a design aid and do not depict all situations. Modifications are the responsibility of the designer/user and should take into account climate conditions such as wind and snow, governing code requirements, and the actual usage and maintenance of the structure.

Flashings:

Where possible, flashings should be lapped away from prevailing winds. Certain flashings should be supported if it is likely that equipment (ladder, etc.) will be used against them or if foot traffic is anticipated. Check with AEP Span any time you intend to specify a prefinished flashing in a gauge or finish different than the roof panels. It is good practice to specify that all flashings be of the same material (gauge, color, finish) as the roof panels to ensure long-term durability. Field-painted flashings rarely equal the durability and color fastness of factory baked-on paint systems. The enclosed details have minimized the use of exposed fasteners where possible. The edges of flashings have also been shown hemmed to strengthen and to minimize the exposure of cut edges.

Flashing design and fabrication is generally the responsibility of the contractor. For convenience, we have provided some flashing drawings on our website at: **www.aepspan.com/files/Arch_Trims_Flashings.pdf**

Applicable Select Seam® flashing part numbers are referenced within this installation guide.

Substrates:

Select Seam® roofing panels can be used over solid substrates only.

Slope Requirements:

Panels should be used on slopes of 3:12 or greater. Inquire with your AEP Span Representative for details.

Condensation, Insulation, & Ventilation:

It is the designer's responsibility to determine the need and composition of condensation control materials including insulation and vapor retarders, as well as ventilation requirements. Metal roofing is susceptible to condensation and its control should be carefully considered. Applications over rigid insulation may require solid blocking/framing for installation of perimeter flashings and drag load fasteners.

Underlayments:

Prior to installation, an underlayment material may be installed over the roof substrate. The designer should select and specify an appropriate material. The specified material must have a non-abrasive top surface that will not mar, scratch, or abrade the underside of the metal panels and flashings.

"Pinning" Requirements:

The panels must only be "pinned" at one location only to resist the "drag" loads caused by the panel weight, live loads, and snow loads. The intensity of the drag load is a function of the slope, the loads involved, and the length of the panels. Panels must not be pinned at more than one location otherwise damages induced by thermal movement will occur. Appendix 'A' gives the drag loads for various slopes and snow loading conditions, and Appendix 'B' shows the number of fasteners required to resist the drag loads.

Thermal Movement:

Both panels and flashings must allow for thermal movement (expansion and contraction) of the materials, especially where long lengths are used. Appropriate gaps or provisions must be provided to accommodate thermal movement.

Snow Design:

Select Seam® panels are suitable for light snow loads only. If possible, valleys, gutters, roof elevation changes and penetrations should be minimized or eliminated in snow areas. Roof penetrations should be located as close to the ridge or peak of the roof as possible to minimize accumulations of ice and snow and the effects of thermal movement of the roof panels. Premium membrane underlayments should be used. Valleys in snow areas require special consideration due to the accumulation of snow and ice from tributary roof areas.

Valleys:

Valley dimensions must be the proper width to account for slope, snow, ice, and rain conditions. Valleys should receive a premium underlayment since they are susceptible to water buildup. Valleys must have positive slope for drainage and be kept free of debris so that water does not back up and intrude under the panels.

Oil Canning:

Flat metal surfaces often display waviness commonly referred to as 'oil canning'. This can be caused by variations in raw material, processing variations, product handling, or variations in the substrate and roofing underlayments. Oil canning is a characteristic, not a defect, of panels manufactured from light-gauge metal. Panels are factory "corrective leveled" to minimize oil canning. Oil canning is not a cause for panel rejection. Additional information is available upon request.

References:

The Sheet Metal and Air Conditioning Contractors' National Association Inc. (SMACNA) manual is an excellent reference for sheet metal contractors. It's guidelines for underlayments, gutter and downspout size requirements, and expansion/ contraction of metals and flashing joints should be followed.

Technical Assistance:

Contact your AEP Span Sales Representative for additional information.

SELECT SEAM (WIDE BATTEN):

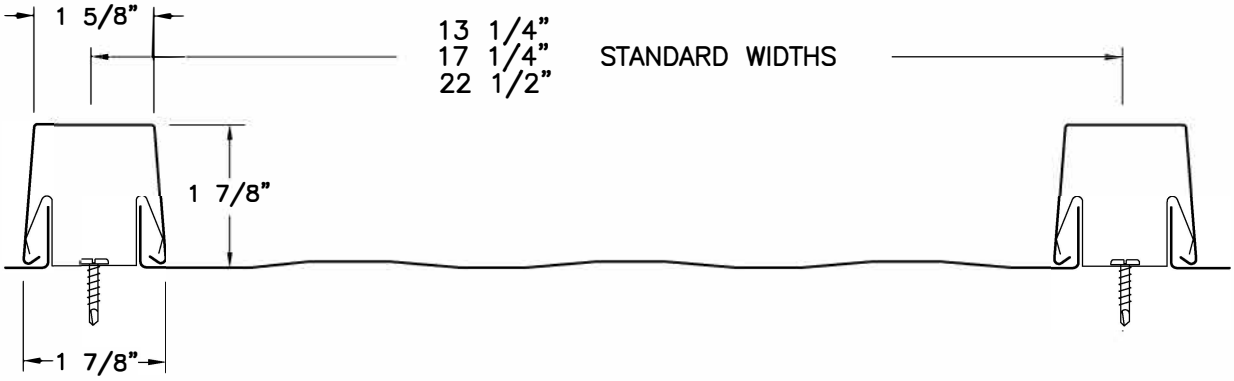

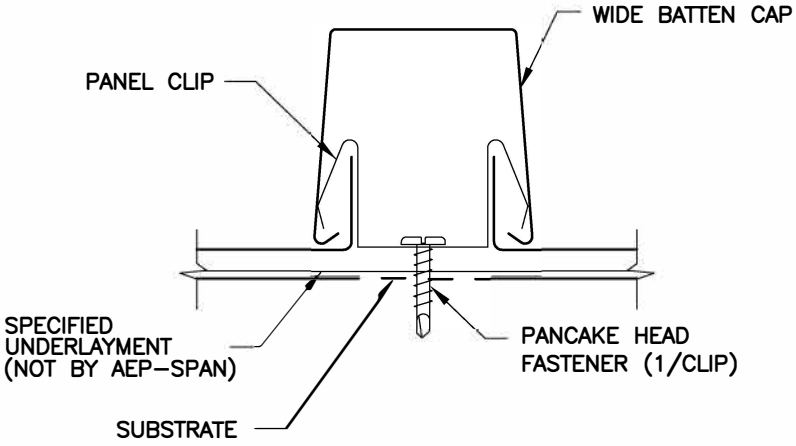

AVAILABLE MATERIALS:

STEEL: 22 & 24GA

AEP SPAN®

SELECT SEAM
WIDE BATTEN

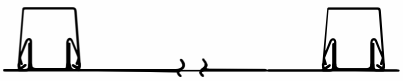

PANEL INFORMATION

SSWB-01

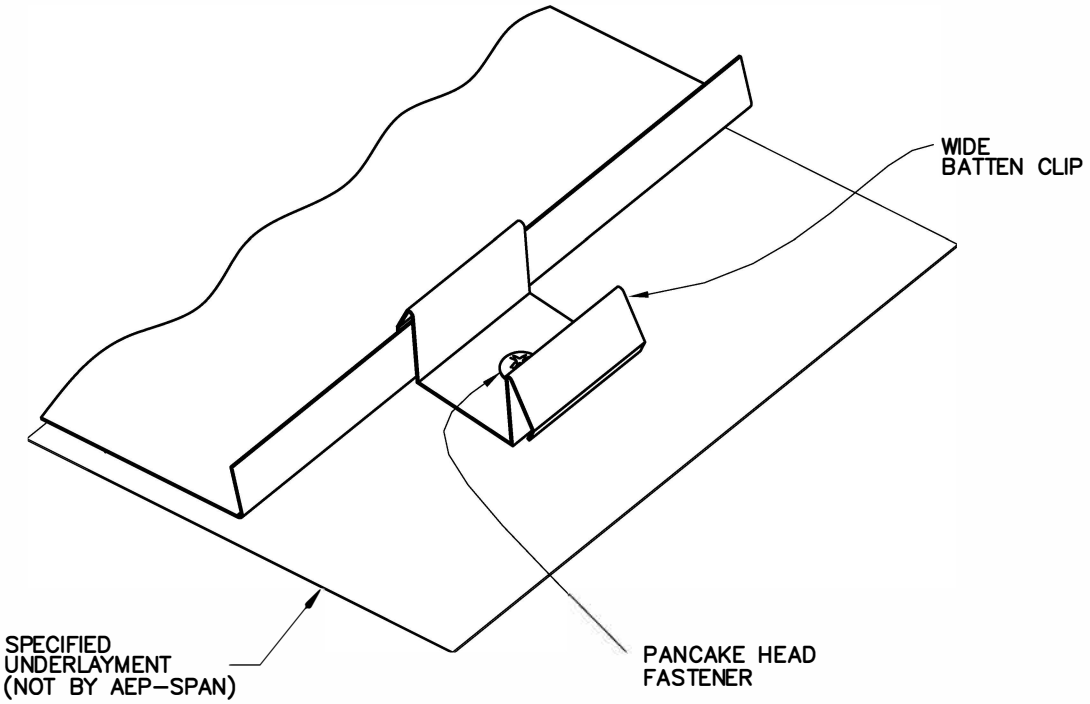

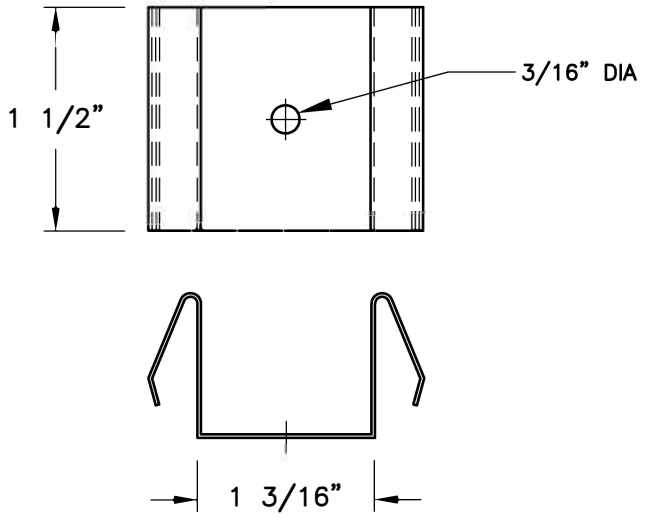

AEP SPAN®

SELECT SEAM

WIDE BATTEN

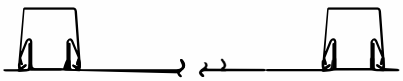

CLIP INFORMATION

index

SSWB-02

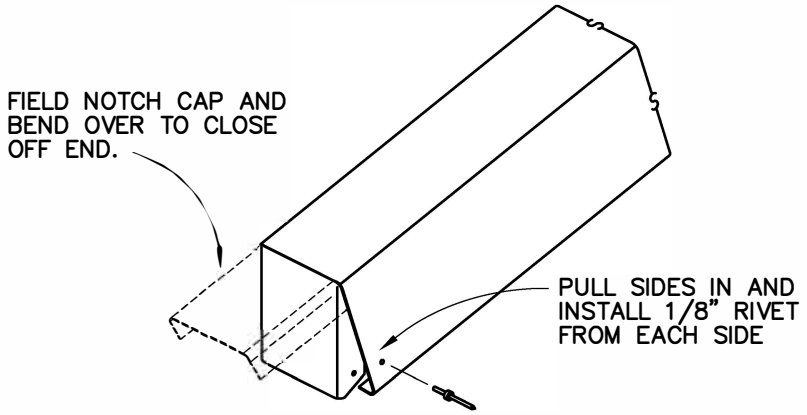

WIDE BATTEN CAP
EAVE DETAIL

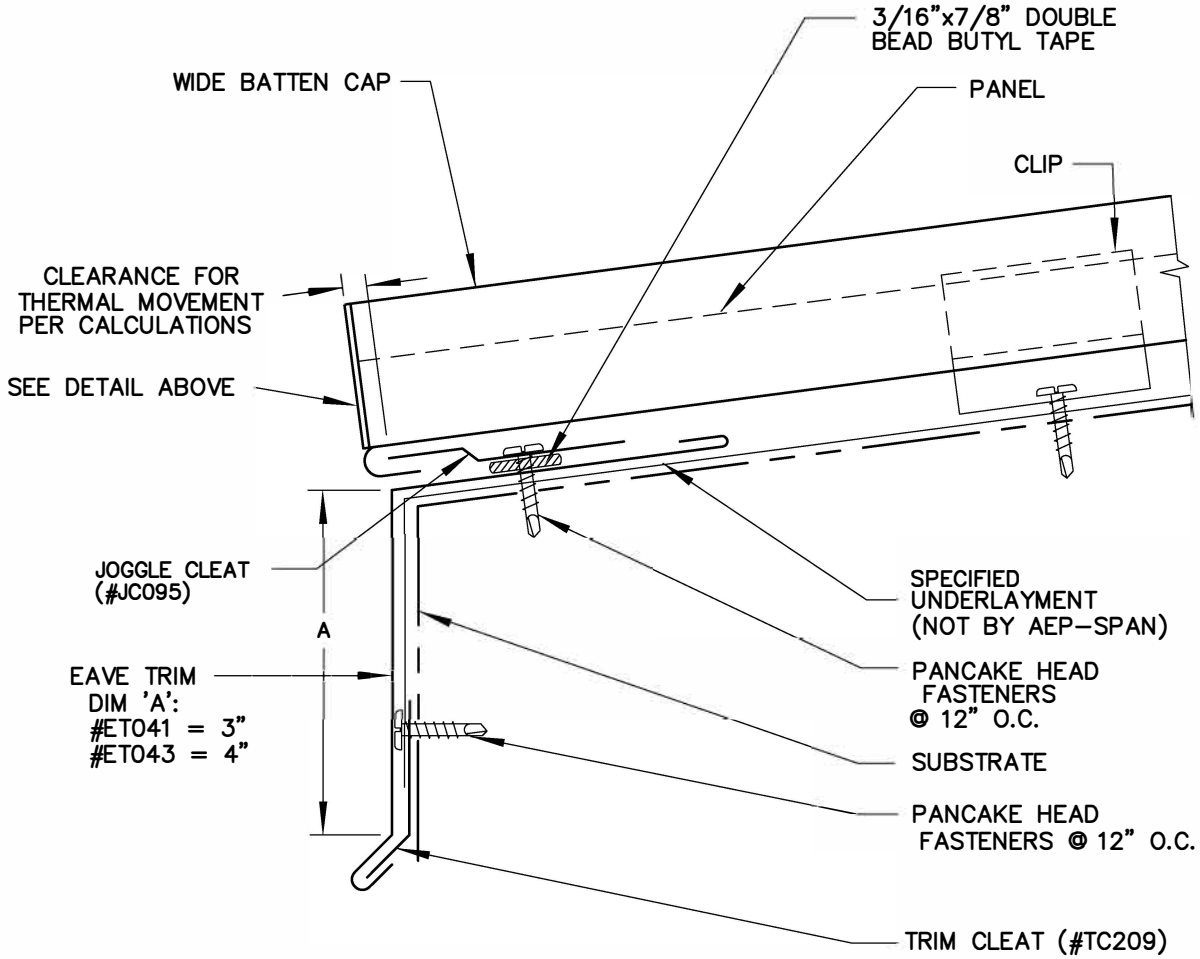

AEP SPAN®

SELECT SEAM
WIDE BATTEN

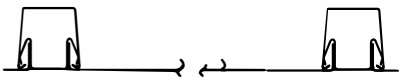

EAVE

index

SSWB-03

STEP 1

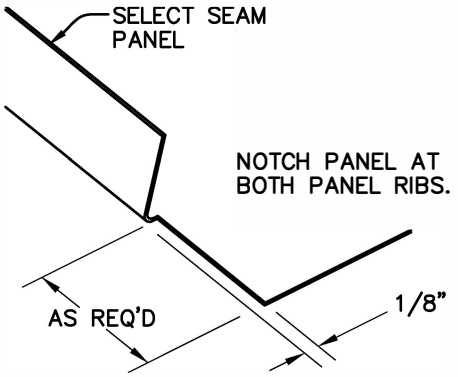

STEP 2

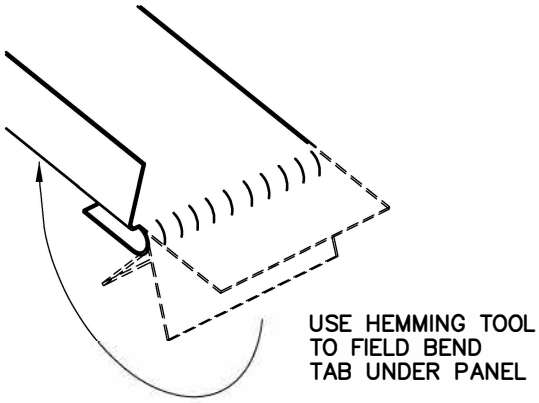

STEP 3

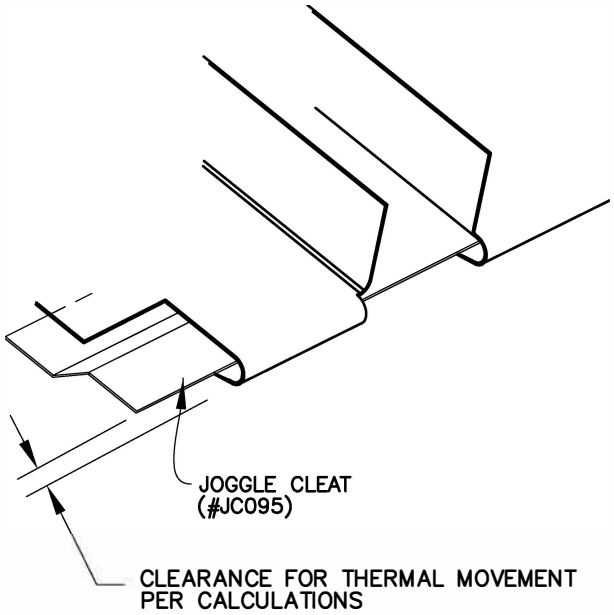

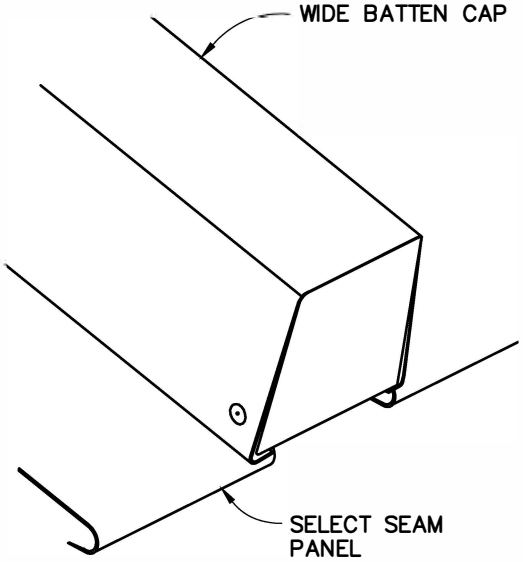

FINISHED EAVE HEM

AEP SPAN®

SELECT SEAM
WIDE BATTEN

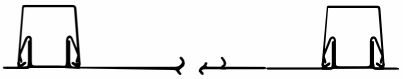

EAVE HEM

index

SSWB-04

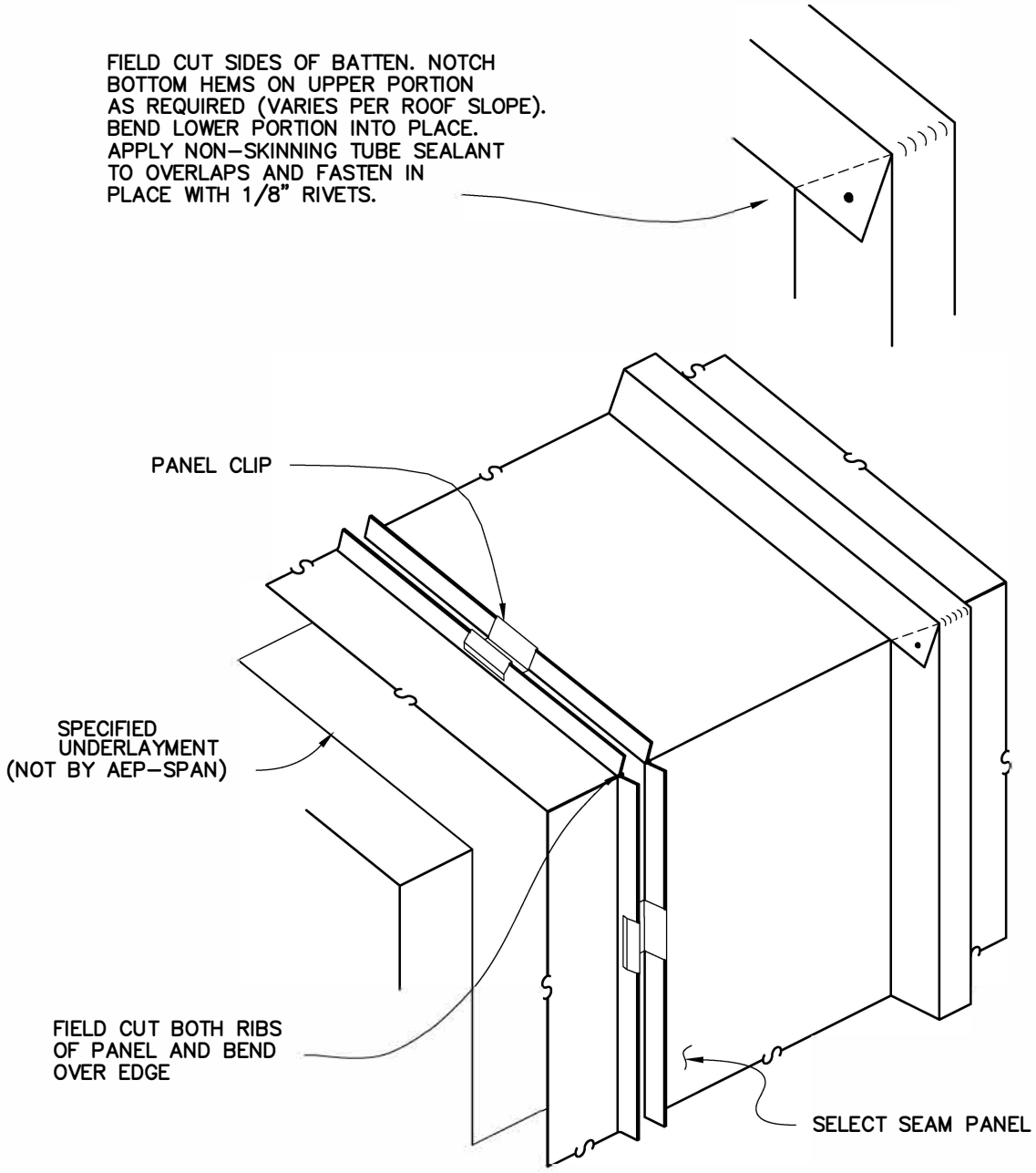

DESIGN CAUTION:
TURNING PANELS DOWN FOR FASCIA MAY ESTABLISH UNWANTED POINT OF PANEL FIXITY.

DESIGN NOTE:
THIS TRANSITION DETAIL IS NOT RECOMMENDED IN REGIONS WITH HEAVY SNOW AND ICE CONDITIONS.

AEP SPAN®

SELECT SEAM
WIDE BATTEN

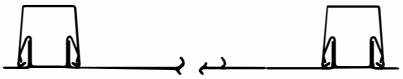

FASCIA TRANSITION

index

SSWB-05

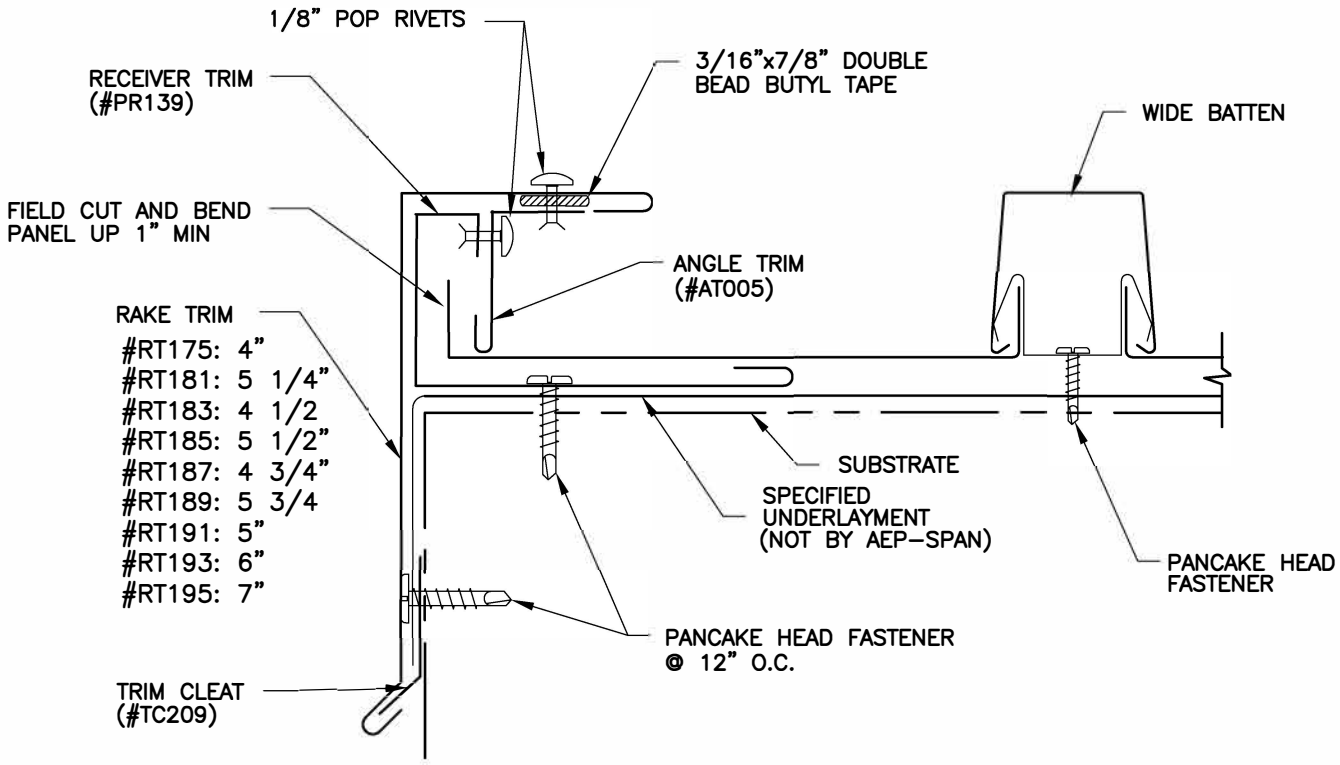

NOTE:
FIELD CUT FIRST
AND LAST PANELS
TO EQUAL WIDTH.

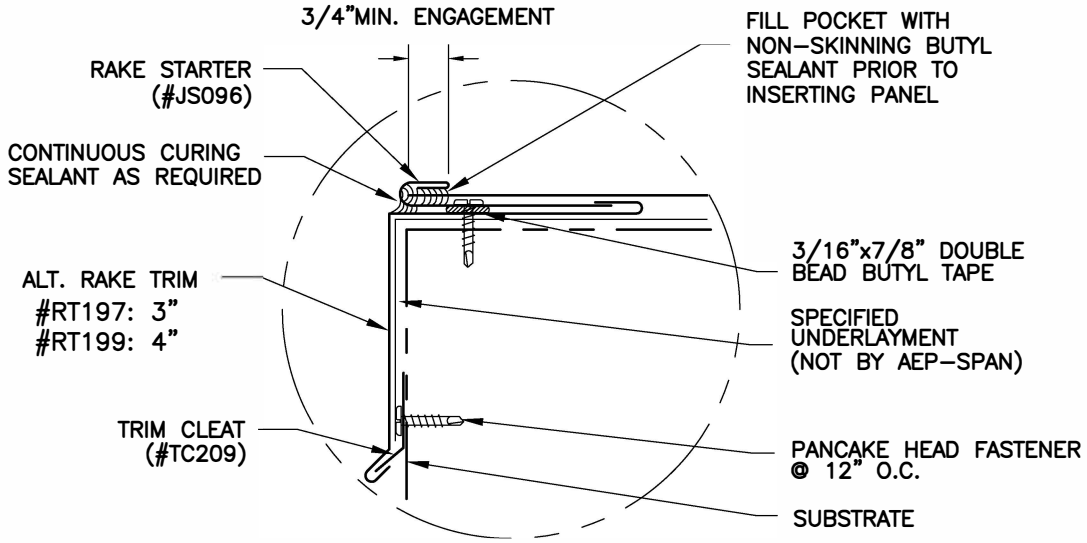

ALTERNATE DETAIL

AEP SPAN®

SELECT SEAM
WIDE BATTEN

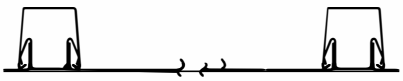

GABLE (RAKE)

index

SSWB-06

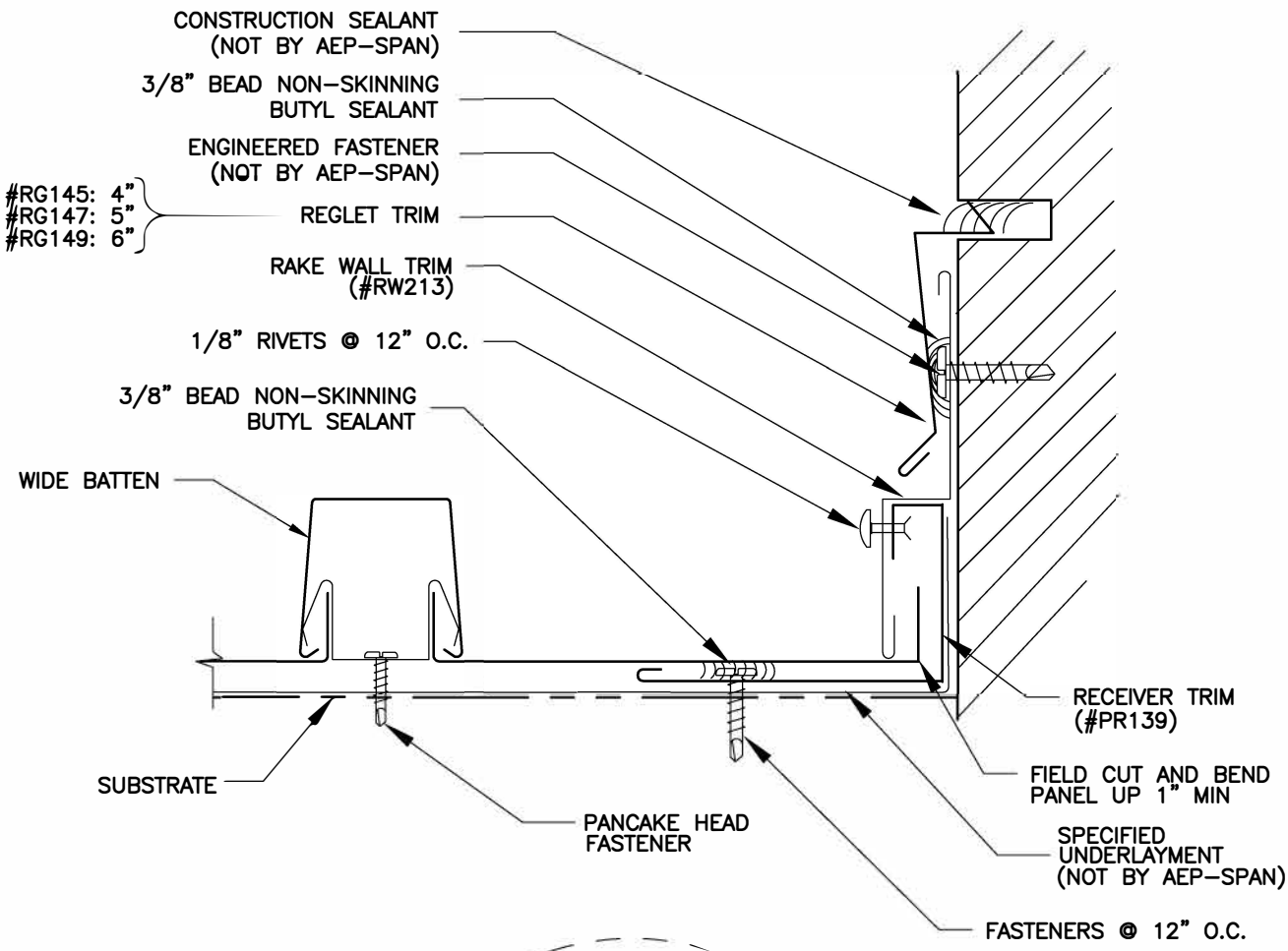

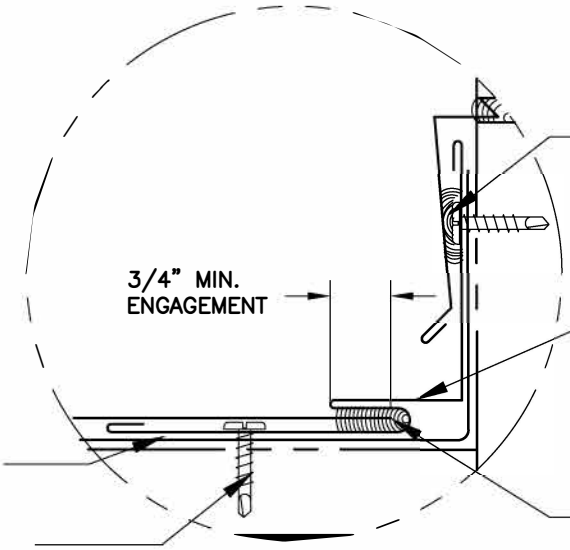

ALTERNATE DETAIL

NOTE:
FIELD CUT FIRST
AND LAST PANELS
TO EQUAL WIDTH.

AEP SPAN®

SELECT SEAM
WIDE BATTEN

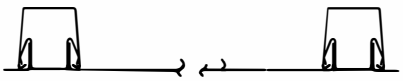

SIDE WALL
(RAKE WALL)

index

SSWB-07

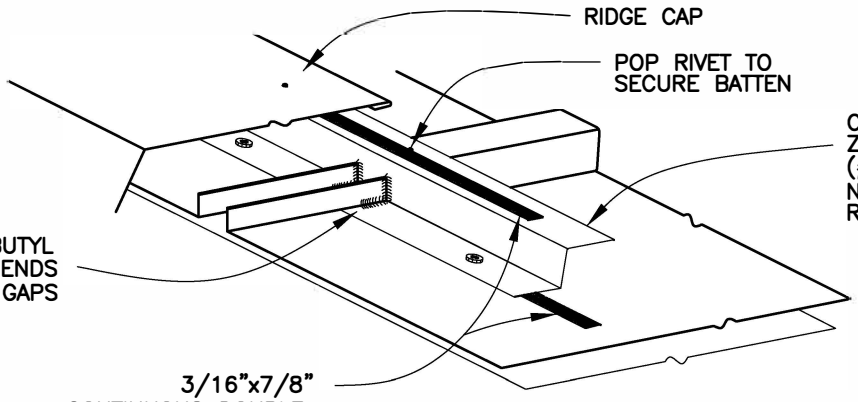

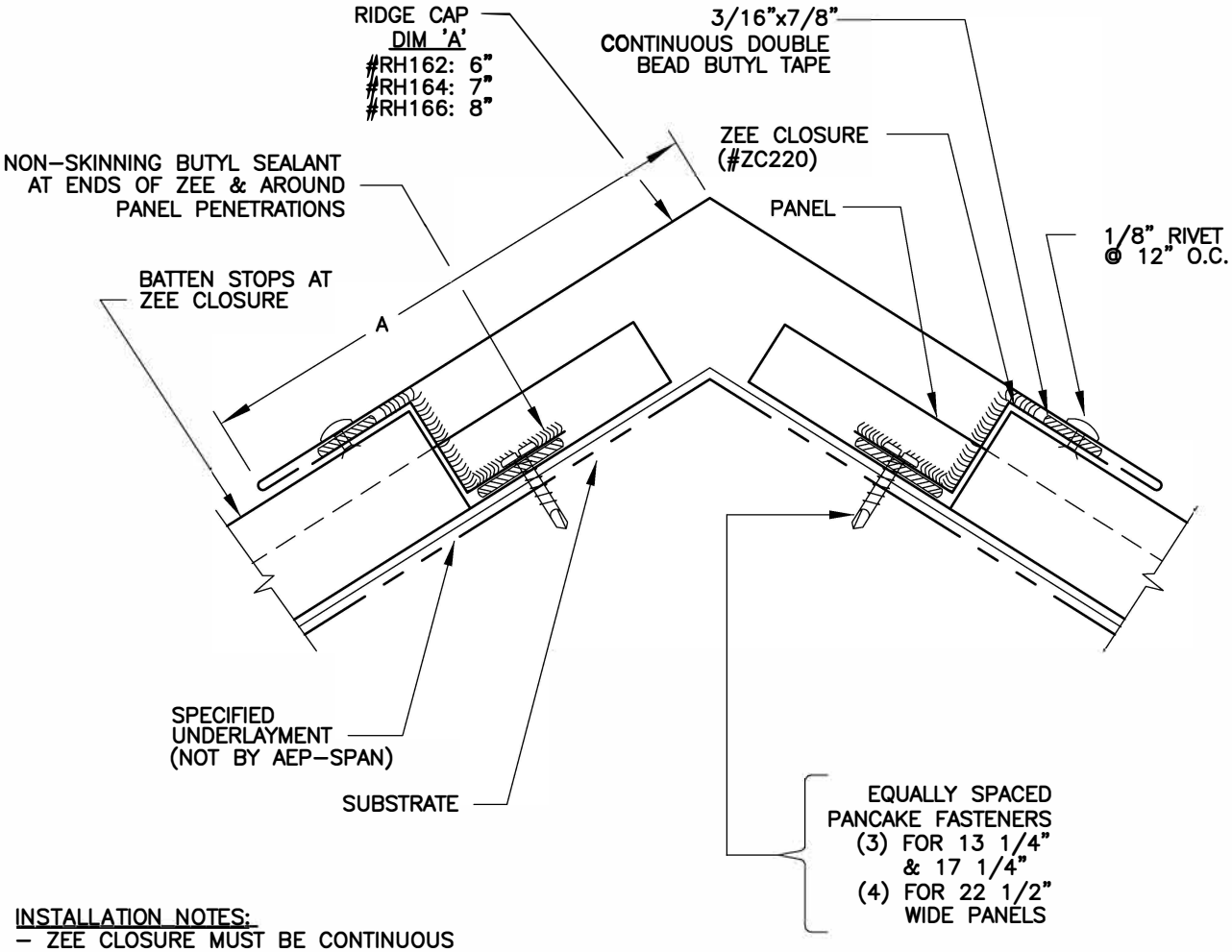

INSTALLATION NOTES:
- ZEE CLOSURE MUST BE CONTINUOUS AND BE NOTCHED FOR PANEL RIBS.
- BATTEN MUST STOP AT OUTSIDE FACE OF ZEE CLOSURE AND NOT PASS THROUGH.

AEP SPAN®

SELECT SEAM
WIDE BATTEN

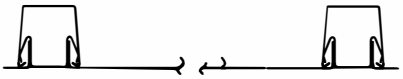

RIDGE/ HIP

index

SSWB-08

REV. 5/4/12

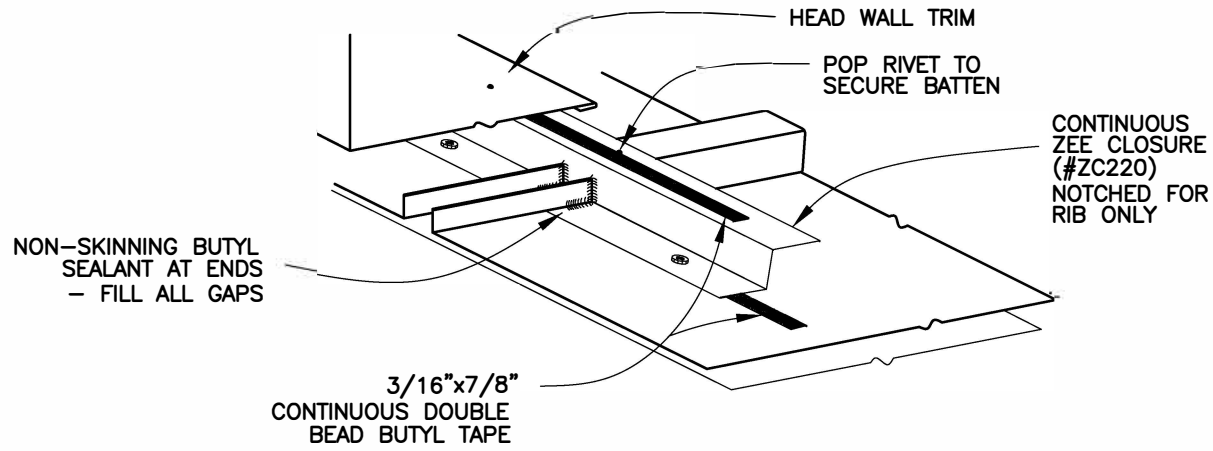

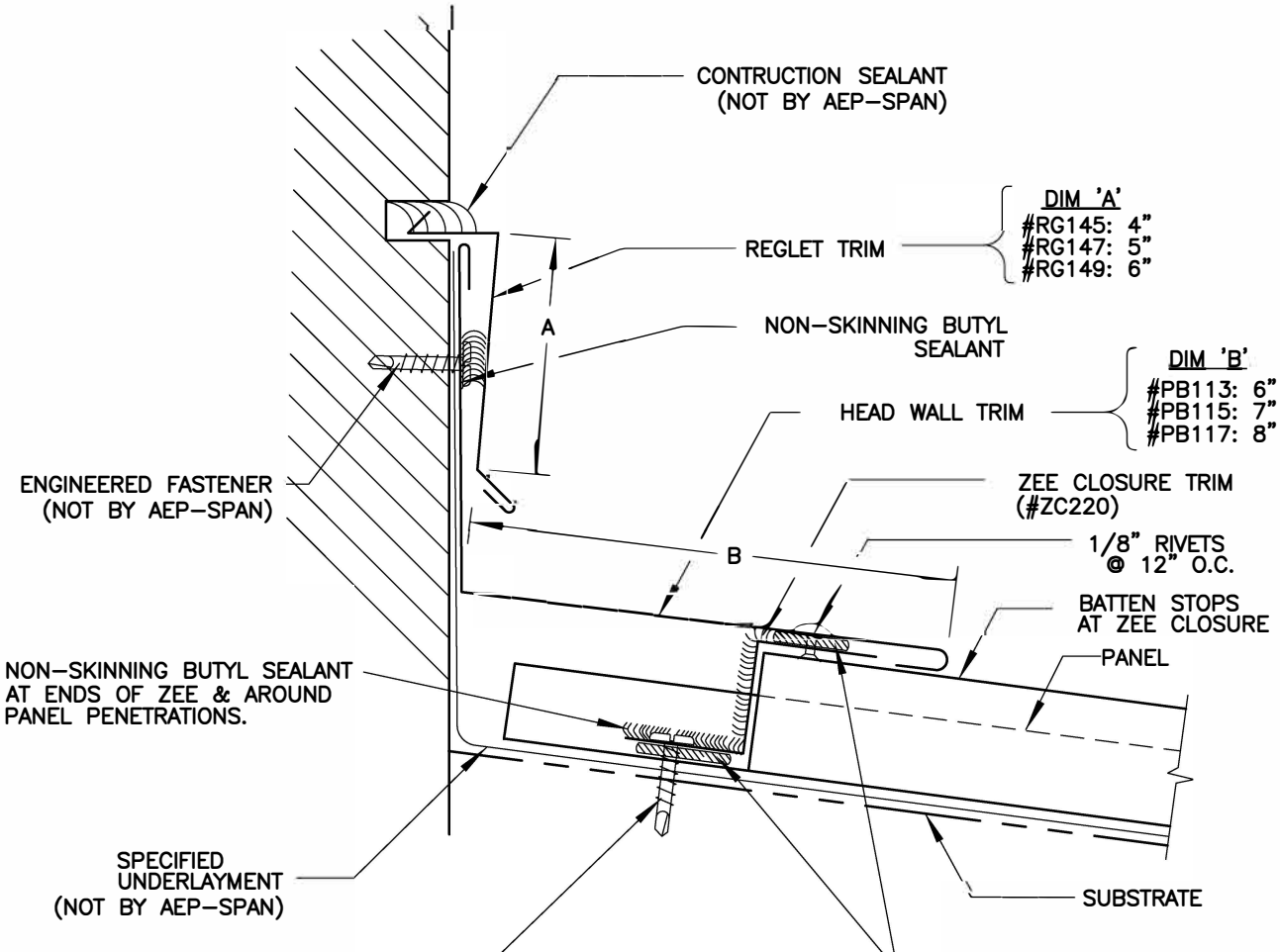

INSTALLATION NOTES:
– ZEE CLOSURE MUST BE CONTINUOUS AND BE NOTCHED FOR PANEL RIBS.
– BATTEN MUST STOP AT OUTSIDE FACE OF ZEE CLOSURE AND NOT PASS THROUGH.

AEP SPAN®

SELECT SEAM
WIDE BATTEN

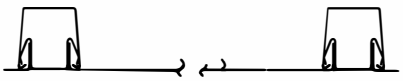

HEAD WALL

index

SSWB-09

REV. 5/4/12

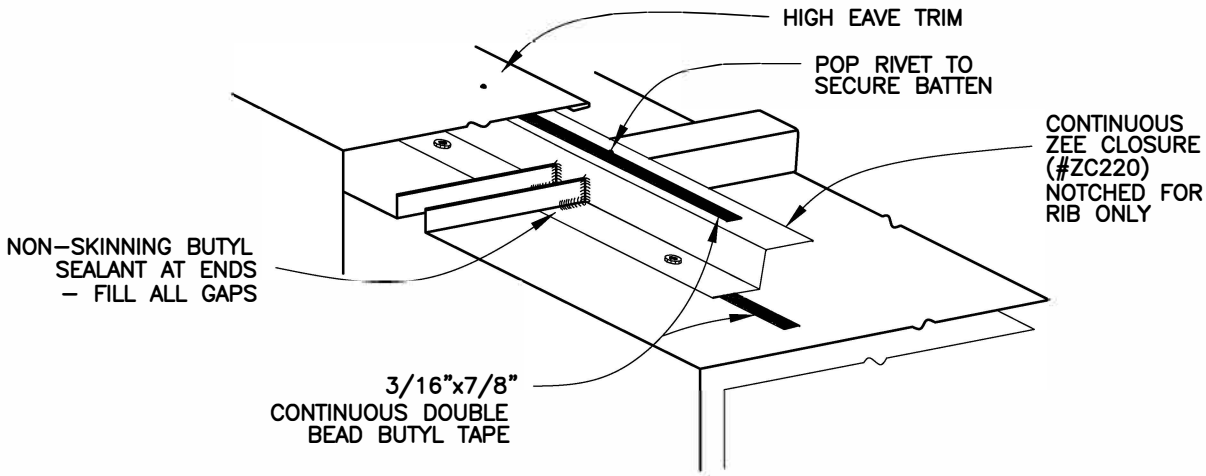

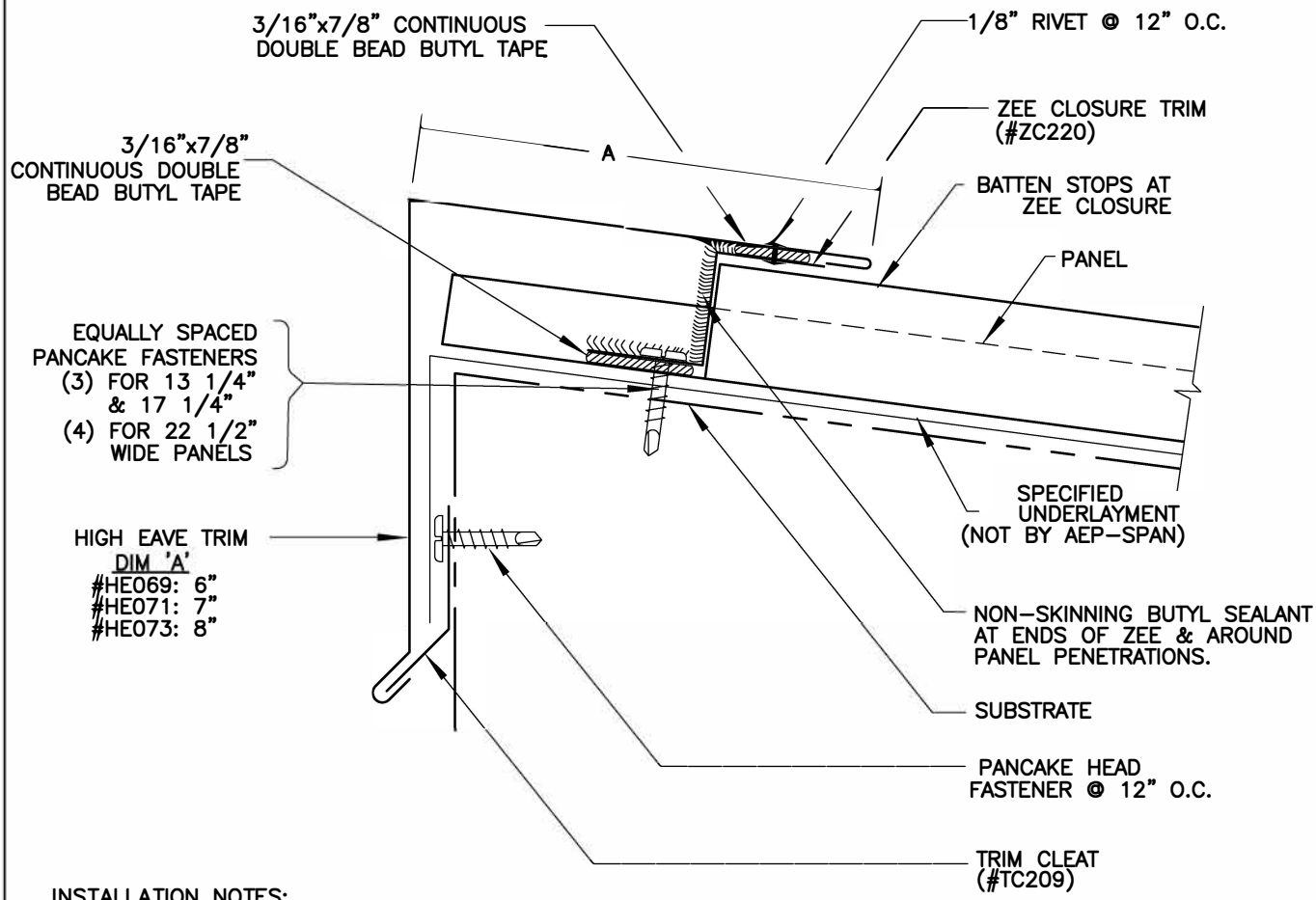

INSTALLATION NOTES:
– ZEE CLOSURE MUST BE CONTINUOUS AND BE NOTCHED FOR PANEL RIBS.
– BATTEN MUST STOP AT OUTSIDE FACE OF ZEE CLOSURE AND NOT PASS THROUGH.

AEP SPAN®

SELECT SEAM
WIDE BATTEN

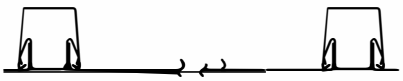

HIGH EAVE

index

SSWB-10

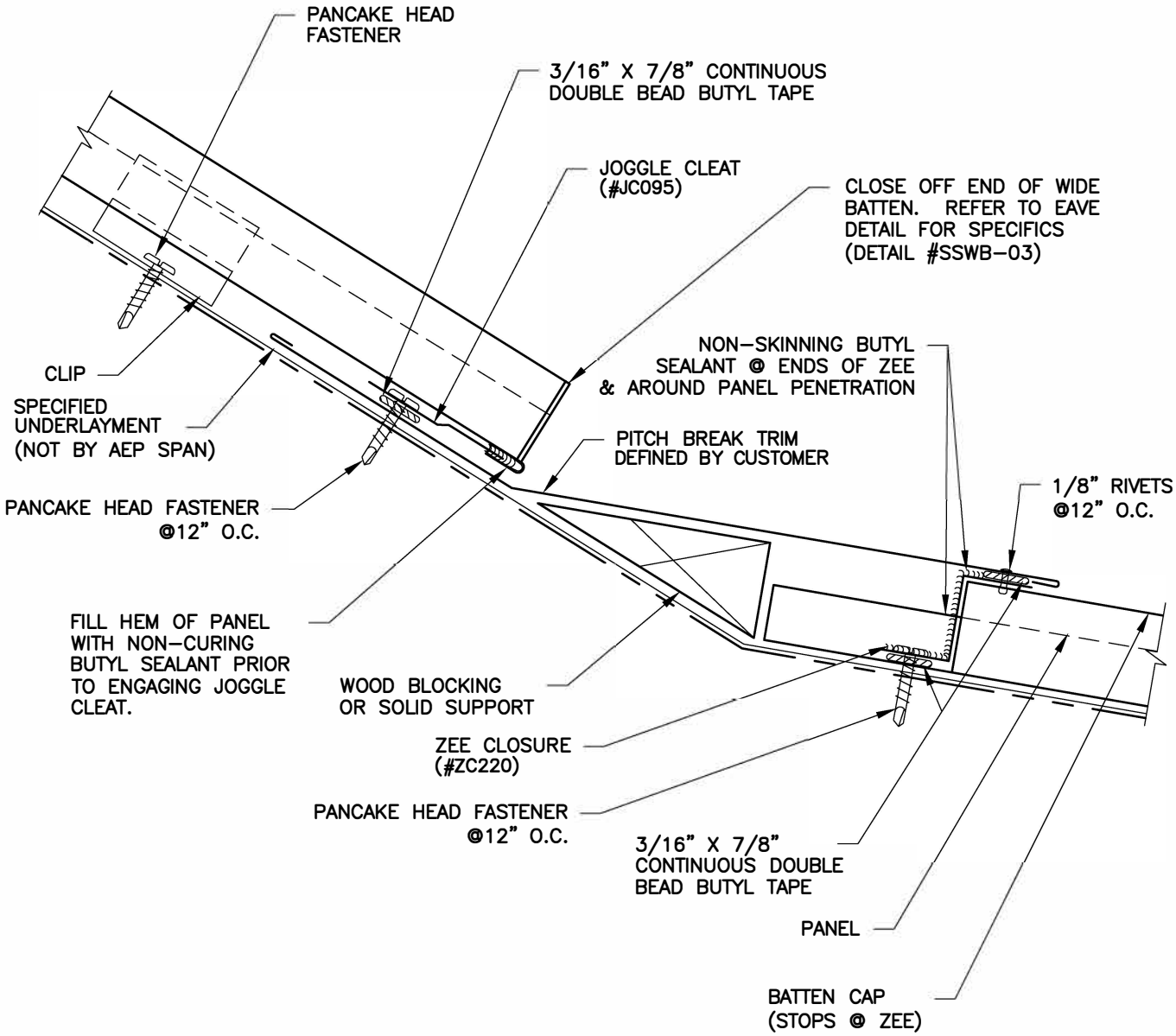

INSTALLATION NOTES:
- ZEE CLOSURE MUST BE CONTINUOUS AND BE NOTCHED FOR PANEL RIBS.
- BATTEN MUST STOP AT OUTSIDE FACE OF ZEE CLOSURE AND NOT PASS THROUGH.
- REFER TO EAVE & RIDGE DETAILS FOR FURTHER INFORMATION ON PROPER PANEL TERMINATIONS.

AEP SPAN®

SELECT SEAM
WIDE BATTEN

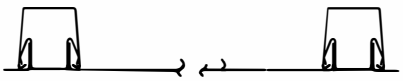

SLOPE TRANSITION, HI-LO

index

SSWB-11

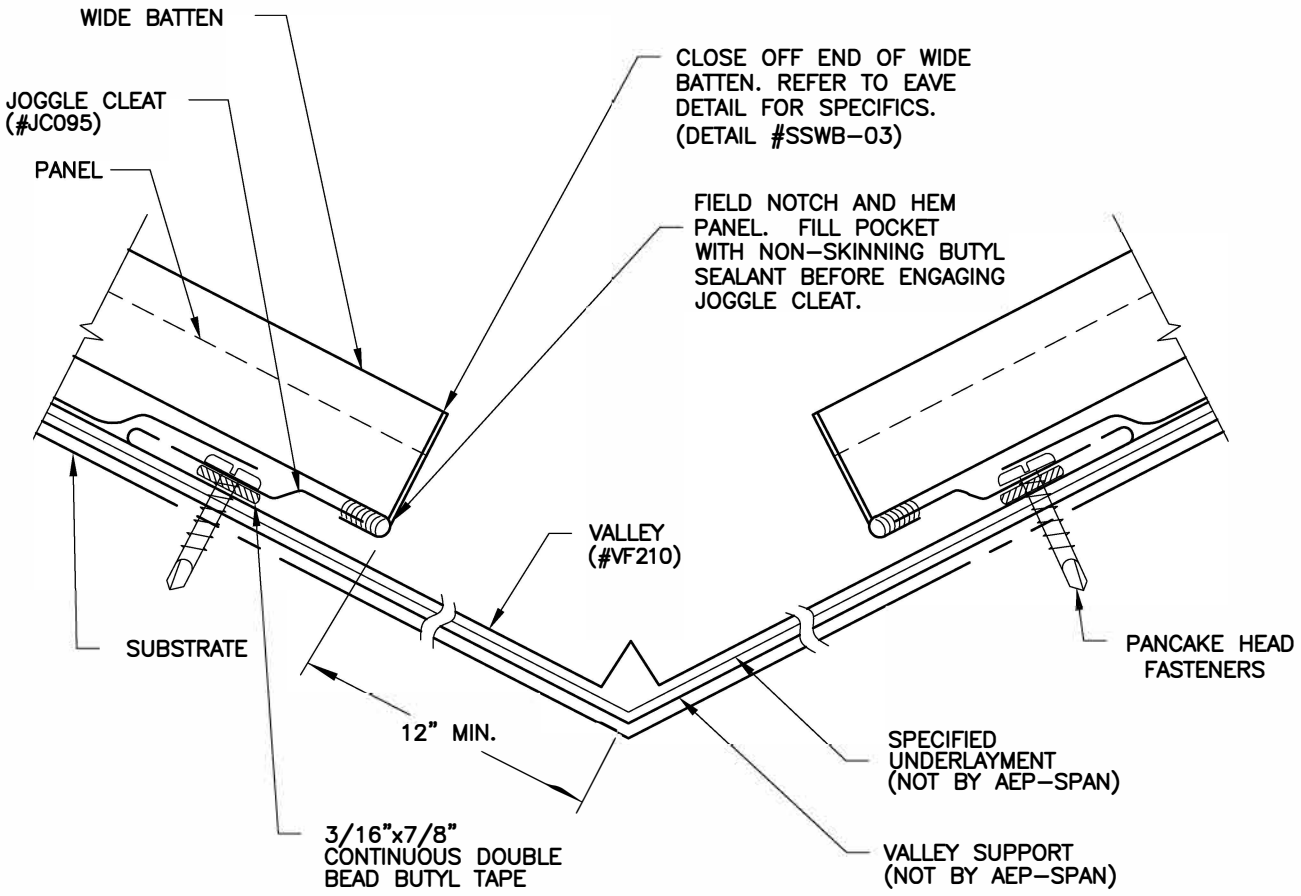

AEP SPAN®

SELECT SEAM
WIDE BATTEN

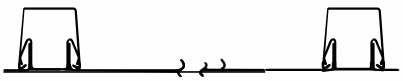

VALLEY

index

SSWB-12

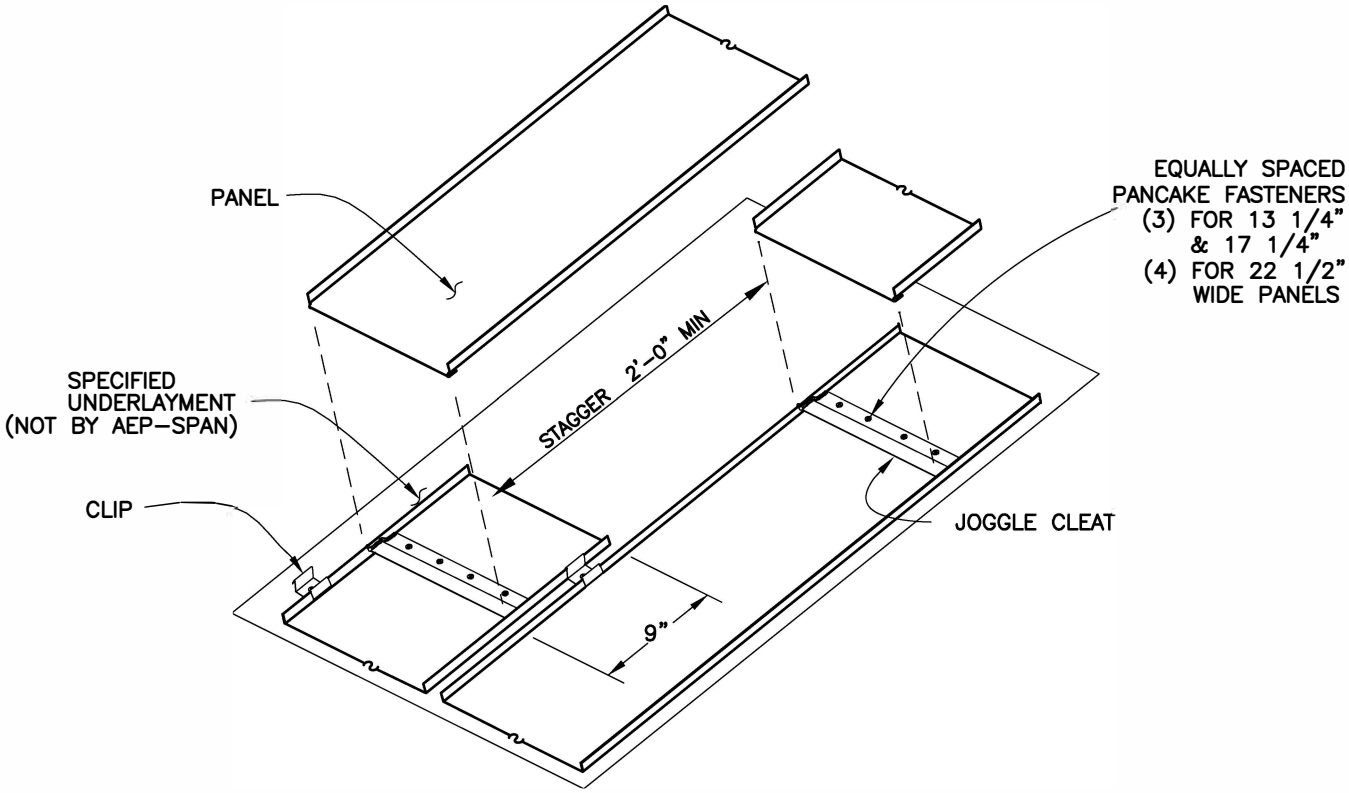

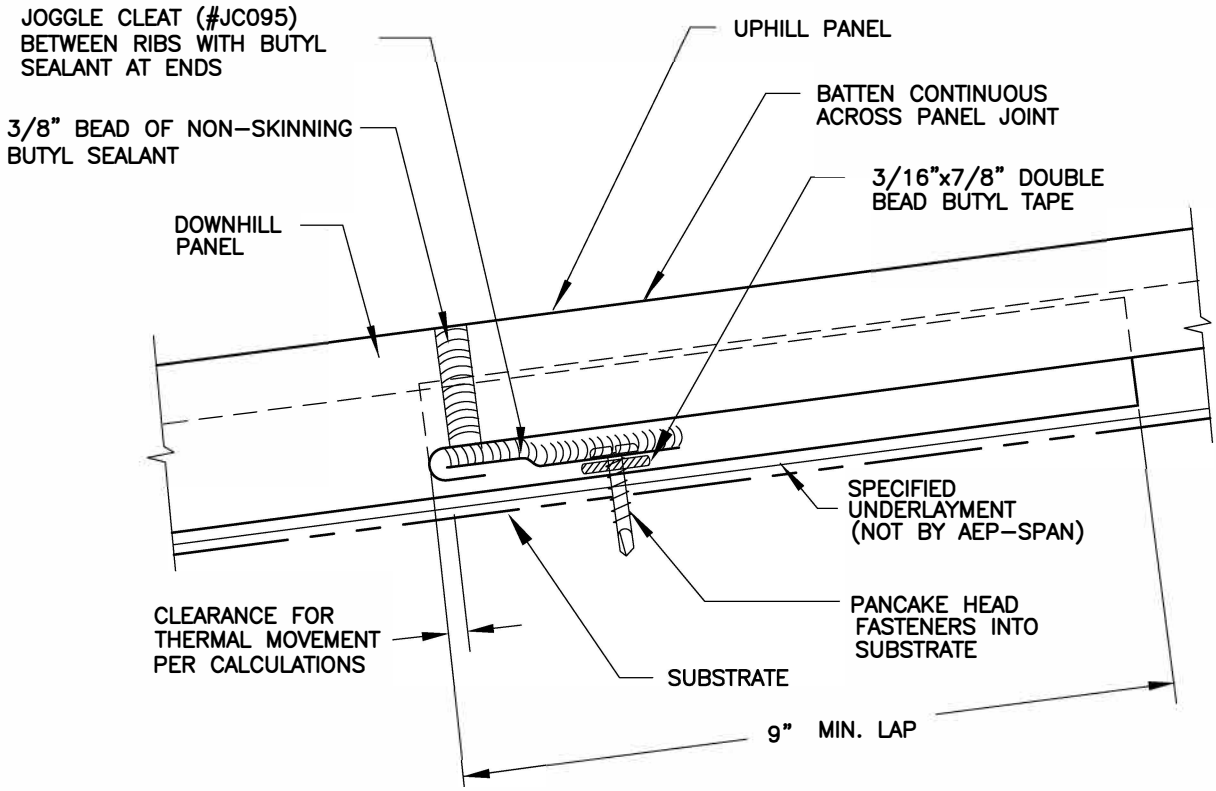

AEP SPAN®

SELECT SEAM
WIDE BATTEN

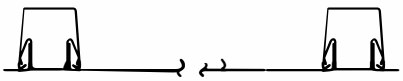

PANEL LAP

index

SSWB-13

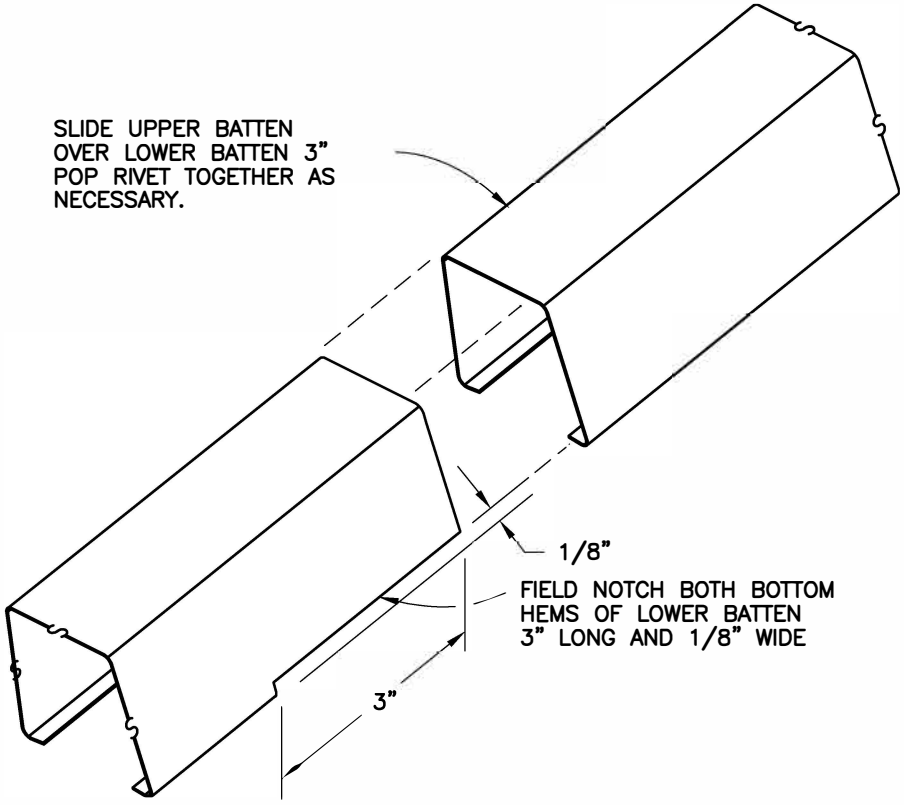

AEP SPAN®

SELECT SEAM
WIDE BATTEN

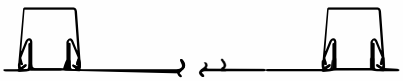

BATTEN LAP

index

SSWB-14

ROOF JACK

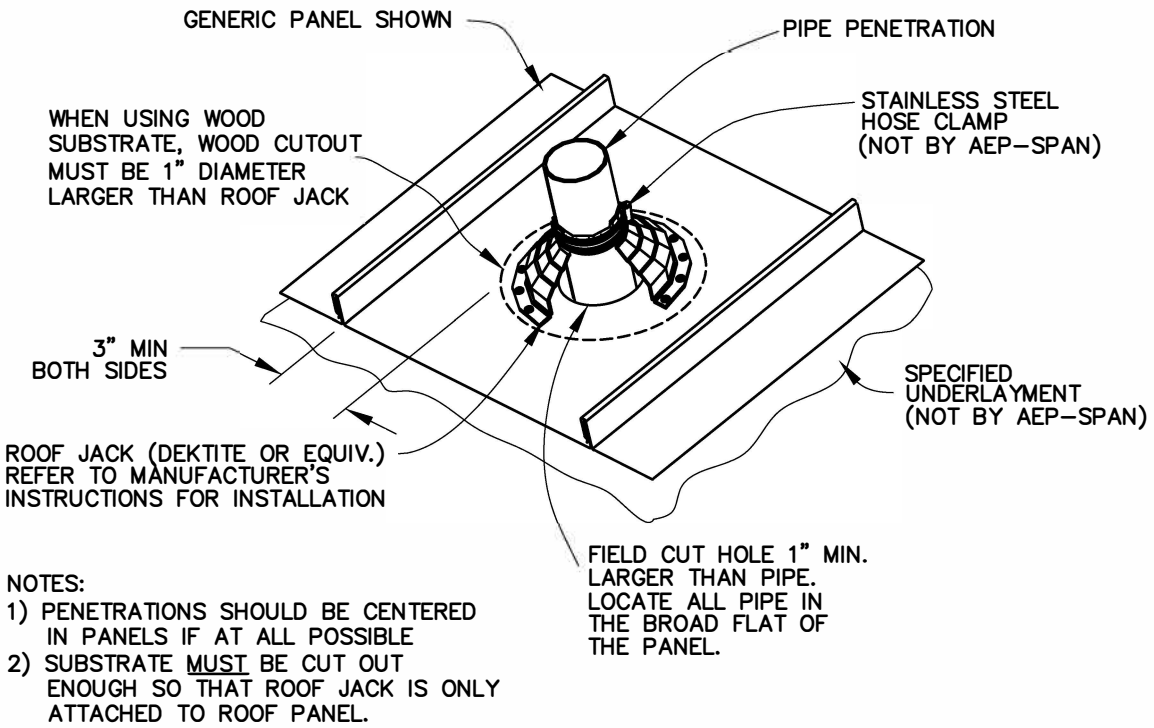

NOTES:
1) PENETRATIONS SHOULD BE CENTERED IN PANELS IF AT ALL POSSIBLE
2) SUBSTRATE MUST BE CUT OUT ENOUGH SO THAT ROOF JACK IS ONLY ATTACHED TO ROOF PANEL.

ROOF CURB

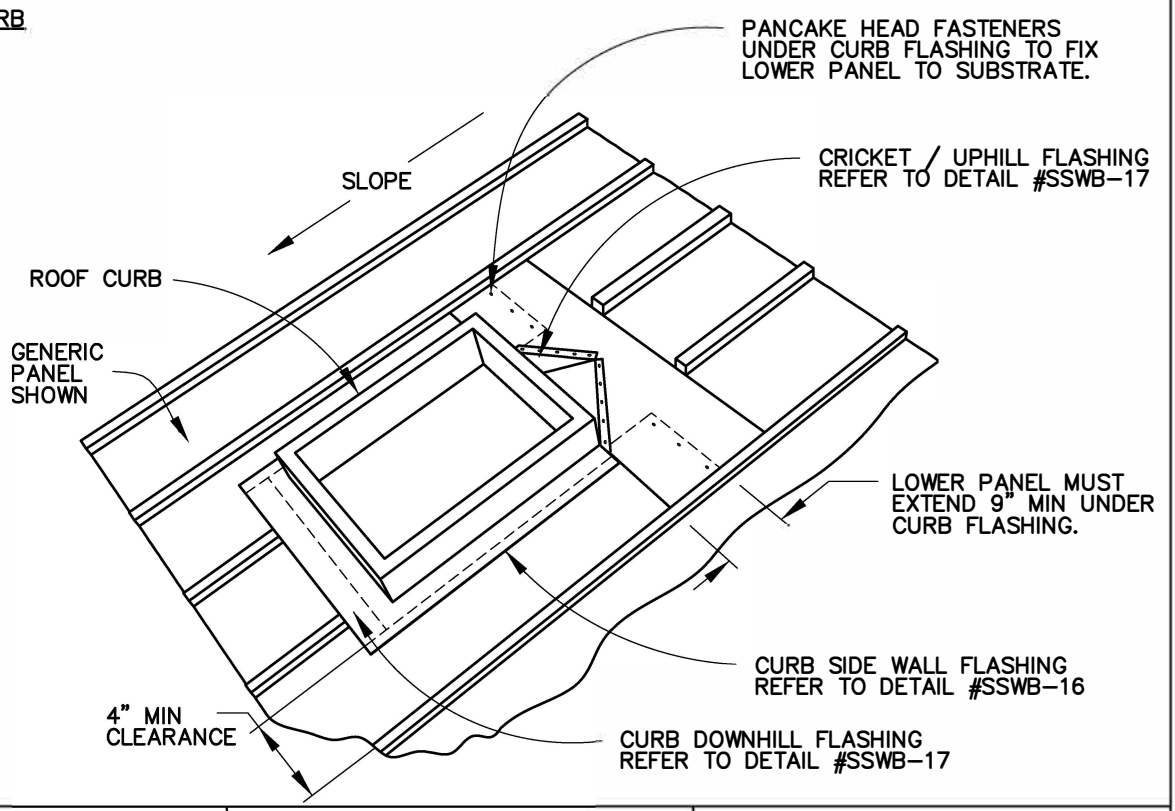

AEP SPAN®

SELECT SEAM
WIDE BATTEN

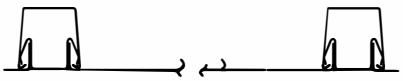

ROOF PENETRATIONS

index

SSWB-15

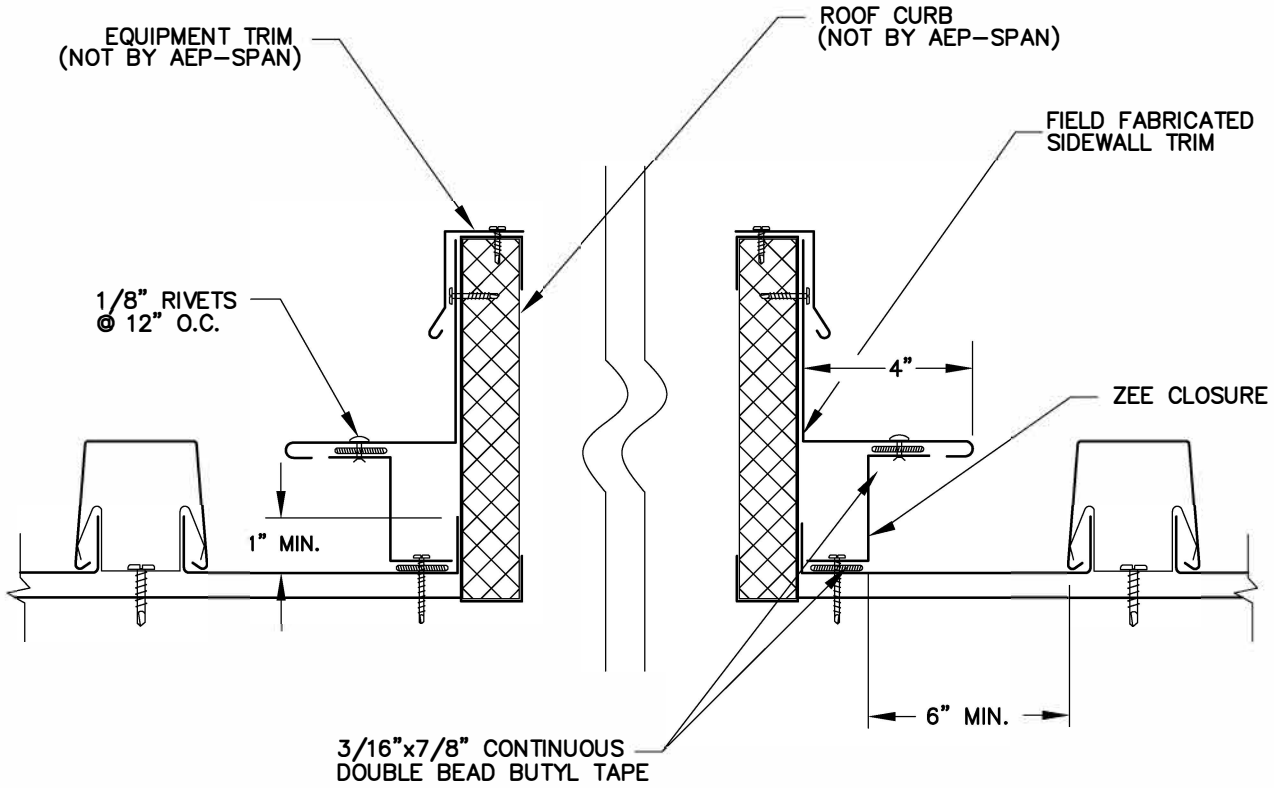

AEP SPAN®

SELECT SEAM
WIDE BATTEN

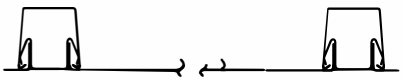

ROOF CURB
(SIDE WALL FLASHING)

index

SSWB-16

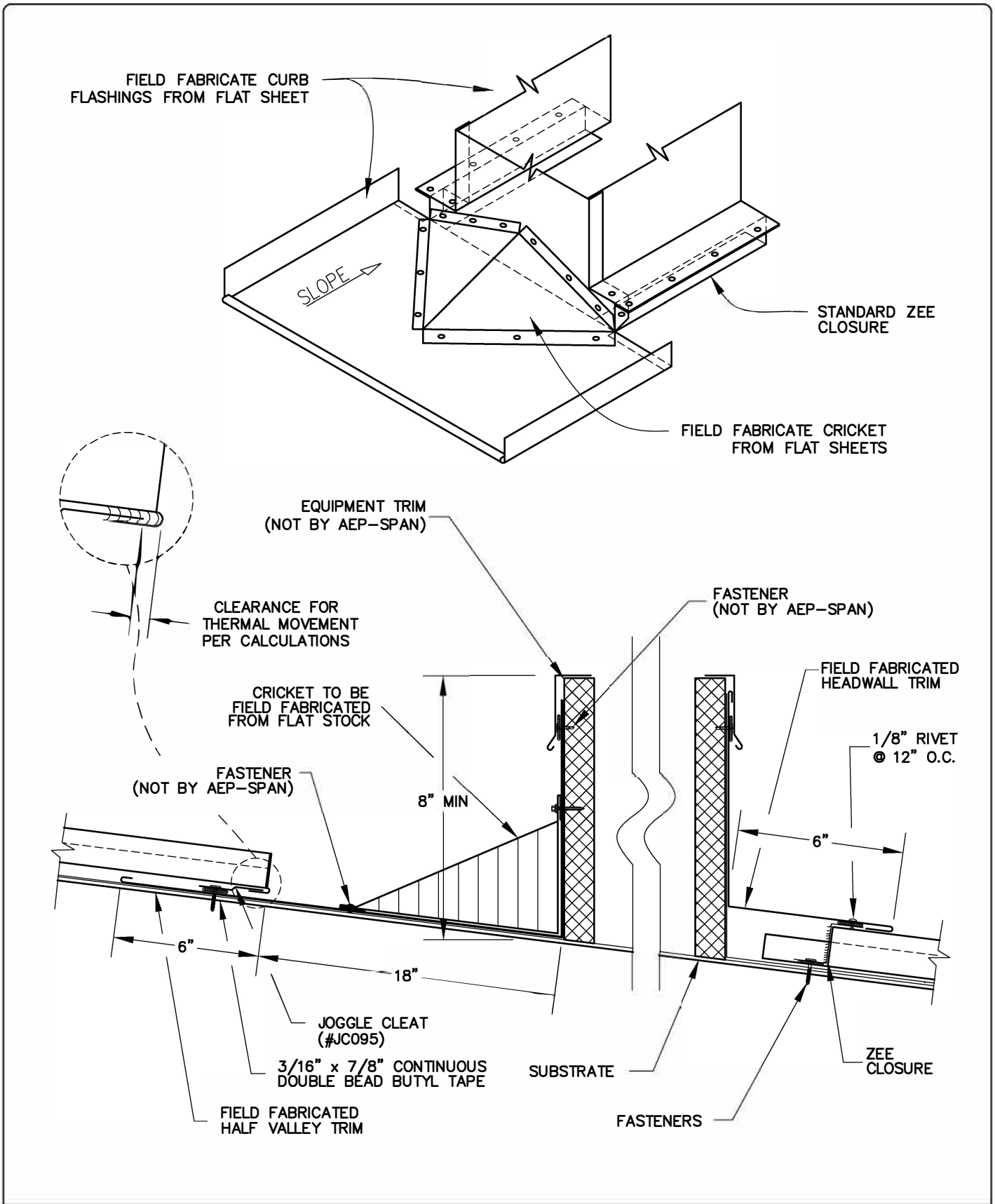

AEP SPAN®

SELECT SEAM
WIDE BATTEN

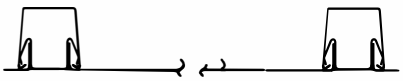

ROOF CURB (UPHILL / DOWNHILL DETAIL)

index

SSWB-17

Appendix A: Snow Drag Loads (lbs/lft of panel)

Select Seam 13 1/4" Wide Batten

Slope	Ground Snow Load, P_g (psf)						
	10	15	20	25	30	35	40
	Snow Drag Load per lft of panel (lb/lft)						
3:12	3.2	4.9	6.5	8.1	9.7	11.3	13.0
4:12	4.2	6.3	8.4	10.6	12.7	14.8	16.9
5:12	5.1	7.7	10.3	12.8	15.4	18.0	20.6
6:12	6.0	9.0	11.9	14.9	17.9	20.9	23.9
7:12	6.7	10.1	13.5	16.8	20.2	23.6	26.9
8:12	7.4	11.1	14.8	18.5	22.2	25.9	29.6
9:12	8.0	12.0	16.0	20.0	24.0	28.1	32.1
10:12	8.6	12.8	17.1	21.4	25.7	29.9	34.2
11:12	9.0	13.5	18.1	22.6	27.1	31.6	36.1
12:12	9.4	14.2	18.9	23.6	28.3	33.1	37.8

Select Seam 17 1/4" Wide Batten

Slope	Ground Snow Load, P_g (psf)						
	10	15	20	25	30	35	40
	Snow Drag Load per lft of panel (lb/lft)						
3:12	4.2	6.3	8.4	10.5	12.7	14.8	16.9
4:12	5.5	8.3	11.0	13.8	16.5	19.3	22.0
5:12	6.7	10.0	13.4	16.7	20.1	23.4	26.8
6:12	7.8	11.7	15.6	19.4	23.3	27.2	31.1
7:12	8.8	13.1	17.5	21.9	26.3	30.7	35.1
8:12	9.6	14.5	19.3	24.1	28.9	33.8	38.6
9:12	10.4	15.7	20.9	26.1	31.3	36.5	41.7
10:12	11.1	16.7	22.3	27.8	33.4	39.0	44.5
11:12	11.8	17.6	23.5	29.4	35.3	41.1	47.0
12:12	12.3	18.4	24.6	30.7	36.9	43.0	49.2

Select Seam 22 1/2" Wide Batten

Slope	Ground Snow Load, P_g (psf)						
	10	15	20	25	30	35	40
	Snow Drag Load per lft of panel (lb/lft)						
3:12	5.5	8.3	11.0	13.8	16.5	19.3	22.0
4:12	7.2	10.8	14.3	17.9	21.5	25.1	28.7
5:12	8.7	13.1	17.5	21.8	26.2	30.5	34.9
6:12	10.1	15.2	20.3	25.4	30.4	35.5	40.6
7:12	11.4	17.1	22.9	28.6	34.3	40.0	45.7
8:12	12.6	18.9	25.2	31.5	37.8	44.0	50.3
9:12	13.6	20.4	27.2	34.0	40.8	47.6	54.5
10:12	14.5	21.8	29.0	36.3	43.6	50.8	58.1
11:12	15.3	23.0	30.7	38.3	46.0	53.7	61.3
12:12	16.0	24.1	32.1	40.1	48.1	56.1	64.2

Notes:

- To determine drag load forces per panel, multiply the tabulated value by the panel length. Then refer to Appendix B for fastener schedule.
- Values assume Ground Snow Load (P_g) is provided. Drag Loads may be reduced if actual Roof Snow Loads (P_s), per ASCE-7, are provided by customer.
- For roof slopes and snow loads greater than listed above, please contact your AEP Span representative.

Appendix B: Drag Load Resistance

Fastener Type	Substrate	Capacity (lbs)	Number of Fasteners per Panel								
			2	3	4	5	6	7	8	9	10
#12-14 x 1" SD HWH	16ga Steel min.	234	468	702	936	1170	1404	1638	1872	2106	2340
1/4-14 x 7/8" Lap SD HWH	22ga Steel min.	184	368	552	736	920	1104	1288	1472	1656	1840
#14 x 1" Type A Mill. Point HWH	1/2" Plywood min.	128	256	384	512	640	768	896	1024	1152	1280
#14 x 1" Type A Mill. Point HWH	2x Douglas Fir	57	114	171	228	285	342	399	456	513	570
#10-16 x 1" SD Pancake Head	16ga Steel min.	206	412	618	824	1030	1236	1442	1648	1854	2060
#10-16 x 1" SD Pancake Head	22ga Steel min.	154	308	462	616	770	924	1078	1232	1386	1540
#10-12 x 1" Type A Pancake Head	1/2" Plywood min.	108	216	324	432	540	648	756	864	972	1080
#10-12 x 1" Type A Pancake Head	2x Douglas Fir	54	108	162	216	270	324	378	432	486	540

Example:

17 1/4" Select Seam Wide Batten attached to 1/2 Batten attached to 1/2 **plywood.**

4:12 slope

30psf snow load

40ft maximum panel length

a) From Appendix A, find the drag load per linear foot of panels: 4:12 & 30psf snow load = 16.5lbs/lft

b) Multiply the load by the panel length = 16.5lbs/lft X 40ft = 660lbs drag load per panel.

c) Find the drag load in Appendix B.

The nearest value is 756 lbs for Qty=7, #10-12 x 1" Type A Pancake Head fasteners.

Notes:

- Contact your AEP Span representative if there are any questions regarding the use of these appendices.
- Fasteners must be located a minimum of 1" from each other and from the end of the panel.
- Fastener capacities per AISI S100, NASPEC, and APA recommendations.

index

MANUFACTURING FACILITY:

Sacramento, California
2110 Enterprise Boulevard
West Sacramento, CA 95691

Tacoma, Washington
2141 Milwaukee Way
Tacoma, WA 98421

CUSTOMER SERVICE:
800-733-4955

Visit us at:
www.aepspan.com

AEP SPAN®