AEP SPAN®

TECHNICAL BULLETINS

TABLE OF CONTENTS

TECHNICAL BULLETINS

Technical Bulletin #1 Oil Canning 3-4
Technical Bulletin #2 Recommended Sealants and Usage 5
Technical Bulletin #3 Out of Plane Substrate 6
Technical Bulletin #4 Fasteners in Treated Wood 7
Technical Bulletin #5 Addressing Snow and Ice 8-9
Technical Bulletin #6 Fall Restraints and Metal Roofing 10
Technical Bulletin #7 Roofing Underlayments 11-13
Technical Bulletin #8 Lightning Protection Systems 14
Technical Bulletin #9 Preventing Storage Corrosion 15
Technical Bulletin #10 Touch-Up Paint 16
Technical Bulletin #11 Roof System Care and Maintenance 17
Technical Bulletin #12 Wall System Care and Maintenance 18
Technical Bulletin #13 Cleaning Coil Coatings 19
Technical Bulletin #14 Removal of Stubborn Stains, Sealants, and Peel Coat 20
Technical Bulletin #15 Peel Coat Guidelines and Best Practices 21
Technical Bulletin #16 Reflectance 22
Technical Bulletin #17 Dissimilar Metals 23
Technical Bulletin #18 Zinc in the Rainwater Runoff from ZINCALUME® Roofs 24-25
Technical Bulletin #19 Color Performance Data 26
Technical Bulletin #20 Field Cutting Metal Panels 27
Technical Bulletin #21 Jobsite Storage & Removal 28
Technical Bulletin #22 Removal of UV Exposed Protective Film 29-30
Technical Bulletin #23 Solar & Your AEP Span Roof 31-32
Technical Bulletin #35 Prestige Series Clip 33
Technical Bulletin #36 Standing Seam Roof-to-Wall Transitions 34-35
Technical Bulletin #37 Swarf Staining on Steel Roofs & Wall Products 36-37
Technical Bulletin #38 Storage of Perforated Steel 38
Technical Bulletin #39 Natural Matte® PVDF Installation 39
Technical Bulletin #40 Natural Matte® PVDF Touch-Up Paint 40

Customer Service Centers
Tacoma, WA
Phone: 800-733-4955
Fax: 253-272-0791

All information stated in the product sheet is correct at time of publication and subject to change without notice, check our website for the latest version.
©2026 ASC Profiles LLC All rights reserved. 0926 web

AEP SPAN TECHNICAL BULLETIN #1

OIL CANNING

DESCRIPTION

Oil Canning is an inherent characteristic of light gauge cold formed metal products, particularly products with broad flat areas. It is a visual phenomenon seen as waviness or distortion in the flat surfaces of metal roofing and siding products. Oil canning is subjective and is normally an aesthetic concern only and does not affect a products strength or performance. Environmental conditions such as temperature, time of day, annual seasons, amount and angle of sunlight (sunny vs. cloudy) can effect the appearance of oil canning.

CAUSES OF OIL CANNING

Oil canning is caused by internal stresses within thin gauge metals. These stresses can be introduced during production of the coil and fabrication of the panels. Additionally, field installation conditions, installation techniques and construction tolerances can greatly impact the presence of oil canning. Thin gauge materials will not straighten out or compensate for irregular substrates or misaligned framing members.

1) Metal Coil Production: The process to transform steel into coil form can contribute to oil canning.

2) Panel Fabrication: The process of transforming steel coils into panels can induce oil canning.

3) Misalignment Of Support System: A support system with large tolerances may cause stresses on the panels as they are fixed to this surface. This stress on the panels can cause oil canning.

4) Over Engagement Of Panels: Most panels allow for expansion and contraction by flexing of webs and slight room at the side joints. If the panels are pulled or pushed during engagement more than designed, the stress will cause deflection in the flat pan of the panel.

5) Over Driving Of Fasteners: This operation causes stresses on the panel, particularly with concealed fastened panels connected directly into the support system. In addition, if the fasteners are not driven into the panels or clips at the same level of tension, normal expansion and contraction of the panels due to regular temperature changes can amplify visual waviness. This waviness caused by thermal forces (expansion and contraction) can appear and disappear daily as the sun rises and sets.

6) Movement Of Primary Structure: If the primary structure of the building has excessive variation in deflection, racking, or drift, it can cause waviness in the flat of the panel, once installed. In addition, settlement of the primary structure can also cause oil canning. This oil canning could be temporary or permanent.

7) Handling Of Panels: The manner in which the panels are handled in the field can induce oil canning. Twisting the panels while lifting and removing from a bundle can induce a wavy appearance. Walking on panels can also cause oil canning.

CONTROLLING OR MINIMIZING OIL CANNING

1) Coils:

a. Purchase quality coil stock within acceptable industry standards and tolerances.

2) Panel Production:

a. Use sharpened and properly aligned slitting blades.
b. Use tension leveler prior to roll forming.
c. Keep roll forming equipment properly adjusted.
d. Maintain a quality check for profile dimensions and angularity
e. Provide proper handling, packaging, & transportation.

3) Design Options:

a. Specify thicker gauge materials such as 22, 20, or 18 gauge vs. 24 gauge.
b. Utilize narrow width panels or trim profiles
c. Add striations or stiffening ribs in the flat of the panel or trim profiles.
d. Specify low gloss paint finishes. Metallic colors tend to have a higher gloss and could emphasize waviness.
e. Provide provisions to accommodate thermal stresses such as use of fasteners and clips that allow for expansion and contraction.
f. Provide proper substrate for attachment.
g. Orientation of panels (vertical vs. horizontal) may reduce the visual appearance of the waviness in the panels.

4) Installation:

a. Properly align framing and assure the substrate is in-plane.
b. Properly store and handle all materials.
c. Follow approved Shop Drawing Details and industry standards.
d. Only use materials supplied and/or approved by the manufacturer.
e. Use proper installation tools, equipment, and techniques, including fasteners.
f. Consider installing a foam backer rod to the back middle of flat surfaces to “pillow” the face.

FIELD CHECKING PANEL FLATNESS

There is no accepted Standard for field checking questioned flatness or oil canning. The following is a reasonable means to help determine the probable source or cause of oil canning. The intent is to systematically investigate the field conditions, handling, and installation process observing when the oil canning appears and therefore its most likely source or cause.

1) Examine the storage area and condition of the crated or packaged materials. Are the materials in a dry protected location, properly supported and retained in a natural manner that does not induce unusual twist or stress on the materials? **OBSERVE**

2) Remove a panel or two from its packaging. Orient it horizontally; allowing it to hang down on its side yet supported along its top rib approximately every 8 to 10 feet by workers or other aligned supports. **OBSERVE**

3) Have the panel(s) transported in the normal manner, both horizontally and vertically, to the location where they will be installed. **OBSERVE**

4) Lay the panel(s) flat and loosely on the substrate to which they will be installed without any clips or other means of attachment. **OBSERVE**

All information stated in the product sheet is correct at time of publication and subject to change without notice, check our website for the latest version.
©2026 ASC Profiles LLC All rights reserved. 0926 web

OIL CANNING

5) Install panel into (or on to) already installed adjoining panel. **OBSERVE**

6) Install clips/fasteners as required and fasten appropriately to the substrate. **OBSERVE**

With close and judicious observation, one should be able to determine at which step(s) oil canning first appeared, if any subsequent step(s) changed its appearance, and what possible steps may be initiated to minimize its presence.

IN SUMMARY

Oil canning is an aesthetic issue that is subjectively identified and evaluated. System performance and structural integrity are not affected unless the distortion is extreme. Since many uncontrollable factors are involved in inducing oil canning, no manufacturer can assure the total elimination of oil canning. Oil canning is not a cause for rejection. However, if attention is paid to the selection of material, panel design and installation practice, oil canning can be reduced or mitigated.

If oil canning is a concern or issue discovered in the field, please contact your sales representative before moving forward on your installation.

References:

1. Metal Construction Association Technical Bulletin #95-1060, January 2003
2. American Iron & Steel Institute. "Sheet Steel Coils & Cut Lengths" Steel Products Manual, Oct. 1979
3. US Steel Sheet & Strip Handbook. July 1983
4. ASTM E 1514 - 93 Standard Specification for Structural Standing Seam Roof Panel Systems

Customer Service Centers
Tacoma, WA
Phone: 800-733-4955
Fax: 253-272-0791

All information stated in the product sheet is correct at time of publication and subject to change without notice, check our website for the latest version.
©2026 ASC Profiles LLC All rights reserved. 0926 web

AEP SPAN TECHNICAL BULLETIN #2

RECOMMENDED SEALANTS & USAGE

INTRODUCTION

This technical bulletin addresses the specific use and application of the three primary types of sealants used in the installation of AEP Span steel roof and wall products.

NON-SKINNING/NON-CURING BUTYL SEALANT

These types of sealants are used purposely in metal roofing and siding applications because panel joints and laps create a very thin space between the materials that are subject to continual dynamic movements which will subject the sealant to shear force. Only a non-skinning, non-curing sealant can perform under such extreme conditions as these types of sealant will never cure or harden over the life of the roof or siding.

Butyl sealants should only be used where dynamic movement of the material will take place due to thermal expansion and contraction and are not subjected to exposure to ultra violet light. UV light will break down these types of sealants overtime making them impractical in exposed applications.

Recommended sealants in this group include, but are not limited to, the following:

- PTI® 707
- SikaLastomer®-511
- Pecora® BA-98
- TremPro® JS-773
- Acryl-R® SM5430

EXTRUDED BUTYL TAPE

These types of sealants are used in a similar fashion to the non-skinning/non-curing sealants as butyl tape will never cure or harden over its lifetime. Butyl tapes main use is for high infiltration areas such as under the joggle cleat at the eave or valley condition or in areas where a continuous aggressive bead of sealant is recommended such as used to seal the top and bottom of the zee closures on ridge or peak condition.

Butyl tape is also recommended at the side lap condition of through-fastened (corrugated) panels due to the fact that gun grade sealants are impractical and messy to apply in a thick continuous bead. Like nonskinning/non-curing sealants, Butyl tape should never be used in applications that are subjected to UV exposure. UV light will break down the sealant overtime. Varying sizes of butyl tape are available in the market. The following sizes are available from AEP Span.

Please consult the appropriate panel installation guide or AEP Span representative for appropriate size recommendations.

- 3/32" thick x 3/8" wide
- 1/16" thick x 1/2" wide
- 1/16" thick x 1/4" wide
- 1/8" thick x 1" wide
- 3/16" thick x 7/8" wide

CURING SEALANTS

This group of sealants fall into two categories,Urethane and Siliconized. These types of sealants require a specific mass of material, cures relatively hard, and will easily fail when subjected to shear and dynamic forces. AEP Span recommends urethane and siliconized sealant only for non-moving joinery and perimeter seals that are exposed to sunlight and require a curing UV resistant sealant.

It should be noted that although these sealant are recommended for use on AEP Span roof and wall products their use should be limited, as most of AEP Span details utilize concealed gun grade Non-skinning/Non-curing butyl sealants or butyl tape sealants.

Recommended sealants in this group include, but are not limited to, the following:

Urethane Sealant

- MasterSeal® NP 1™
- Sikaflex®-201 US
- Dynatrol® I-XL
- Dymonic® FC

Siliconized Sealant

- Dow Corning® 795 Silicone Building Sealant
- Titebond® Weathermaster® Metal Roof Sealant

All of the sealants listed in this letter have specific uses and applications. Please consult our Technical Department or AEP Span Representative for questions concerning specific use and applications or if a sealant not listed needs to be reviewed for use on AEP Span supplied materials.

PTI is a registered trademark of H.B. Fuller Licensing & Financing, Inc.
SikaLastomer and SikaFlex are registered trademarks of Sika AG.
Pecora and Dynatrol are registered trademarks of Wambold Corporation.
TremPro and Dymonic are registered trademarks of Tremco Incorporation.
Acryl-R is a registered trademark of Illinois Tool Works Inc.
MasterSeal is a registered trademark and NP 1 is a trademark of Construction Research & Technology GMBH.
Dow Corning is a registered trademark of Dow Corning Corporation.
Titebond and WeatherMaster is a registered trademark of Franklin International, Inc.

Customer Service Centers
Tacoma, WA
Phone: 800-733-4955
Fax: 253-272-0791

All information stated in the product sheet is correct at time of publication and subject to change without notice, check our website for the latest version.
©2026 ASC Profiles LLC All rights reserved. 0926 web

AEP SPAN TECHNICAL BULLETIN #3

OUT OF PLANE SUBSTRATE

OUT OF PLANE SUBSTRATE IMPACTS

There are three fundamental areas affected by an out-of-plane metal roof or wall substrate; aesthetics, thermal movement, and performance.

Aesthetics

The first issue with an out-of-plane substrate deals with aesthetics. Any unevenness or undulations in the roof or wall substrate will telegraph through the metal panels and may cause an unpleasant exterior appearance. This can accentuate oil canning and give a wavy appearance along the length of the metal panels.

Thermal Movement

The next concern is that an uneven substrate could interfere with the panel's ability to expand and contract under thermal loads. This is particularly an issue with concealed fastener metal roof and wall panels that utilize concealed clips for attachment. These clips are designed for installation on a relatively flat plane. An out-of-plane substrate could cause binding points at clip locations. This can create an unwanted point of fixity and could prohibit the panel from expanding and contracting normally. Expansion and contraction should not be impeded; due to high thermal forces, panel expansion and contraction will still occur, even if the clips are bound or restricted at uneven areas of the roof or wall substrate. The thermal movement forces could result in clip failure or complete panel disengagement from the substrate if the shear resistance of the clip and/or clip fasteners is compromised.

Performance

The last concern deals with wind uplift performance. If metal roof or wall panels are installed on an out-of-plane substrate, there is the potential for improper panel-to-clip engagement at the panel side laps. If the panel interlock is not engaged properly the wind uplift performance of the panels could be impacted. This has the potential to create significant problems with a metal roof or wall panel's ability to resist wind uplift pressure. Improper panel side lap engagement can also affect air and water infiltration resistance which can compromise the environmental performance of the roof or wall system as well.

GUIDELINES

Common industry guidelines have established that roof substrates should not exceed the following limits for out-of-plane conditions:

- ¼ inch in 20 feet
- ½ inch across building elevation
- ⅛ inch in 5 feet

ASTM E 1514, "Standard Specification for Structural Standing Seam Steel Roof Panel Systems", also addresses substrate requirements. Section 5.1.2 within states, "Deflection and serviceability shall be accounted for. The deflection shall be limited so as to allow the roof to perform as designed. The substrate deflection shall not cause strains to the panels that affect serviceability of the system."

The "transfer of ownership" clauses in project contracts are becoming a significant factor in recent times with regards to out-of-plane or deflected substrates. Addressing out-of-plane substrates is of vital importance.

SOLUTIONS

When a metal roof and/or wall subcontractor takes over the substrate and commences their scope of work, typically there is meant to be an inspection by a qualified representative. The subcontractor should be authorized to accept the substrate or reject questionable areas that may need reworking by the appropriate previously responsible trade.

If subcontractors fail to do this and start installing metal roof or wall panels, they are essentially accepting whatever conditions they are given with no recourse. Additional labor costs may be incurred to correct other trades' substrate installation issues. Inconsistent substrate joints, seams and framing will almost always transfer through to the metal roof or wall panels and create a kaleidoscope of issues which the installer becomes responsible for at their expense.

A possible corrective action to resolve out-of-plane conditions with minimal impact to the substrate or metal panels is to use shims under the panel clips. ¼" thick shims of plywood can be cut into 4" X 6" squares – sized similar to a panel clip bearing plate, and layered under the clips to even out the clip line with the rest of the substrate areas. Multiple shims may be required depending on the extent of the unevenness of the substrate.

The fasteners will need to be long enough to go through the shims and penetrate the substrate as originally designed. If installed properly, and the uneven area is made level with the rest of the roof or wall, there should be no impact to installed panel aesthetics, thermal movement, or system performance. Manufacturer warranties should also remain intact.

The corrective action above only applies to panels that have the ability to span open framing as the shims lift the panel off the substrate thereby creating a spaced framing condition. The plywood shim method is acceptable for use on all AEP Span roof and wall panels with the exception of Select Seam. Select Seam requires a continuously solid substrate for installation and cannot span open framing.

The corrective action above or any alternate solutions shall be reviewed and approved by the design professional overseeing the project to determine if they are acceptable. Other materials and/or techniques may be required for resolving out-of-plane conditions if the above plywood shim option is not acceptable.

Customer Service Centers
Tacoma, WA
Phone: 800-733-4955
Fax: 253-272-0791

All information stated in the product sheet is correct at time of publication and subject to change without notice, check our website for the latest version.
©2026 ASC Profiles LLC All rights reserved. 0926 web

AEP SPAN TECHNICAL BULLETIN #4

FASTENERS IN TREATED WOOD

HISTORY

Since the early 1930's, the lumber industry has been using a chemical solution known as Chromated Copper Arsnate (CCA) as the primary preservative in its production of pressure treated lumber used in commercial and residential applications. The purpose of pressure treating wood was to prevent premature wood failures due to insect infestations and deterioration due to rot. After many decades of use, the Environmental Protection Agency (EPA) cited the arsenic and chromium contained in CCA as possible human and environmental hazards. In response, the lumber industry voluntarily ceased manufacturing pressure treated lumber with the CCA preservative in 2004. After that, several alternative preservatives, such as Alkaline Copper Quaternary (ACQ) and Copper Azole (CA), were introduced as the new generation of wood preservatives. These were found to be equally toxic to insects and provide resistance to mold and rot.

There were both gains and losses with this change. The gains were obvious with the elimination of the hazardous arsenic and chromium compounds. The key loss is that these new preservative solutions contain a significant increase in their copper levels. Copper is known to be extremely corrosive when in contact with certain metals such as carbon steel, aluminum, or zinc. These metals are dissimilar to copper and will create a galvanic reaction when in contact and in the presence of moisture. Therefore, ZINCALUME® zinc-aluminum metallic coated panels, and galvanized (zinc) coated panels are very vulnerable to this increased potential for corrosion. alvanized steel clips and fasteners also at pose a high corrosion risk.

The change in wood preservatives and the associated increase in corrosion potential was a major concern nd challenge for the construction industry. The initial response by some manufacturers, as well as consultants and trade organizations, was to recommend that asphalted barrier coatings be applied to any metals contacting this new generation of treated lumber. In addition, that all fasteners be changed over to an austenitic (300 series) stainless steel. These responses were not welcomed by many in the industry because of the added product and installation costs.

Widespread industry testing over the years has confirmed that the new generation of ACQ and CA treated lumber is in fact highly corrosive and some form of additional protection absolutely required. Aluminum, was found to be highly reactive with treated lumber. In the case of both ZINCALUME® and galvanized coated products, even when post-painted, a protective barrier of self-adhered bitumen membrane (ice & water shield type material) is recommended between them and the treated lumber. Minimally, a 30# felt membrane that is complete and uncompromised could be used if permanently secured and moisture, including condensation, is reasonably absent. Direct contact with any treated lumber voids all of AEP Span's paint and material warranties.

FASTENERS

Fasteners are susceptible to high levels of corrosion due to their significant contact with treated lumber. The general consensus within the industry is that austenitic (300 series) stainless steel fasteners should be utilized when fastening to lumber treated with copper based preservatives. Epoxy coated, proprietary coated fasteners specifically for treated lumber, and hot dip galvanized fasteners may be alternative solutions; most are generally not considered to provide the same level of protection as stainless fasteners. All fastener selection and attachment should be carefully evaluated for the applications for which they are to be used.

Some alternative wood preservatives are in use that have less corrosive compounds, notably inorganic boron (SBX), and micronized copper (MCQ). Although the risk of galvanic corrosion is potentially reduced, the above fastener recommendations remain.

THE IBC PRESCRIPTIVE REQUIREMENTS FOR TREATED WOOD FASTENERS ARE AS FOLLOWS

2304.10.5.1 Fasteners And Connectors For Preservative-Treated Wood.

"Fasteners, including nuts and washers, in contact with preservative-treated wood shall be of hot-dipped zinccoated galvanized steel, stainless steel, silicon bronze or copper. Fasteners other than nails, timber rivets, wood screws and lag screws shall be permitted to be of mechanically deposited zinc coated steel with coating weights in accordance with ASTM B 695, Class 55 minimum. Connectors that are used in exterior applications and in contact with preservative treated wood shall have coating types and weights in accordance with the treated wood or connector manufacturer's recommendations. In the absence of manufacturer's recommendations, a minimum of Fasteners in Treated Wood ASTM A 653, Type G185 zinc-coated galvanized steel, or equivalent, shall be used.

Exception: *Plain carbon steel fasteners, including nuts and washers, in SBX/DOT and zinc borate preservative- treated wood in an interior, dry environment shall be permitted."*

In lieu of code-approved alternatives, IBC requires the fasteners to be of stainless steel, or a hot dip galvanized construction (the additionally noted silicon bronze and copper fasteners are not compatible with coated steel roof and wall products).

IN SUMMARY

AEP Span requires all panels to be isolated from pressure treated lumber using a self-adhered bitumen membrane, or similar barrier, to avoid galvanic corrosion. Fasteners should be of 300 series stainless steel. Alternative fastener materials/ protective coatings should be carefully considered to confirm their appropriate usage in specific applications.

Customer Service Centers
Tacoma, WA
Phone: 800-733-4955
Fax: 253-272-0791

All information stated in the product sheet is correct at time of publication and subject to change without notice, check our website for the latest version.
©2026 ASC Profiles LLC All rights reserved. 0926 web

AEP SPAN TECHNICAL BULLETIN #5

ADDRESSING SNOW & ICE

INTRODUCTION

The purpose of this technical bulletin is to provide a basic review of snow & ice retaining systems and heat tape systems and present AEP Span's position regarding their use. This document also presents some of the aspects design professionals should consider when developing a project design.

THERE ARE TWO SCHOOLS OF THOUGHT REGARDING THE RETENTION OF SNOW & ICE ON ROOFS

1) Do Not Retain: This approach requires that the roof be designed so that the snow & ice can melt and naturally exit off the roof. Careful attention should be used in configuring the building to prevent or minimize the possibility of retaining large accumulations of snow & ice on the roof. Also, the roof configuration itself should direct sliding snow or ice melt from discharging over entrances and walkways or other critical areas such as ground equipment and landscaping.

2) Retain: This approach intends to retain the snow & ice on the roof until it melts and exits the roof in a controlled manner. One concern of this approach is that amassing large accumulations of snow or ice could represent a dangerous potential should the snow & ice retaining system suddenly fail, be structurally inadequate, or be in a diminished condition due to lack of maintenance, improper installation, etc. A sudden release of large amounts of snow & ice accumulation could be dangerous, or even deadly.

COMMON SNOW & ICE MANAGEMENT SYSTEMS UTILIZED WITH METAL ROOFING

1) Snow & Ice Retaining System: Mechanical components (clamps, rails, bars, or individual snow stops/guards, etc.) used on roofs in climates where moving or falling snow or ice could create a nuisance or hazard to people, equipment, or landscaping.

2) Heat Tape System: An electrically-heated cable or wire used to melt snow and ice on a roof so that the snow and ice does not accumulate in critical areas. Electrically-heated cable or wire (aka "heat tape") is often used to melt snow and ice in critical areas of a roof, such as valleys, gutters, and downspouts. Such systems must be designed and installed to endure the forces of moving ice and snow and allow easy replacement since they can burn out or need repair. The self-regulating type of heat tape, which adjusts its heat output to the temperature encountered, is the most popular type.

THERE ARE THREE PRIMARY WAYS TO ATTACH SNOW & ICE RETAINING SYSTEMS TO A METAL ROOF

1) Seam Clamps: These allow attachment of the retaining system to the roof panel's standing seam without penetrating the metal roof panel. This attachment method is probably the most reliable way to attach a retaining system to a metal roof system. Careful attention must be paid when locating seam clamps to ensure that the standing seam metal roof system's (including associated roof panel clips) ability to accommodate thermal expansion and contraction are not compromised by the seam clamps. In most cases seam clamps should be located mid-way between one-piece roof panel clips and at the location of two-piece clips.

2) Adhesive: Snow guards are attached to flat areas of the roof panels using adhesives. The strength of this type of attachment depends on how well the adhesive adheres to the metal roof panels. With painted roof panels, proper adhesion to the panel's coating can be a concern, along with the adhesives impact on panel coating warranties. Under snow retention loads there may also be the risk of coating separation from the underlying substrate.

3) Fasteners: Some snow guards utilize fasteners to attach them to the panel's flat areas or to the panel ribs. This approach is not normally recommended as it creates additional penetrations in the metal roof panels which can be points of possible water intrusion into the structure. These also have the potential to impede the thermal movement of the roof panel by "fixing" it to the substrate. Exposed fasteners are always a concern of any warranted roof system and should be avoided if possible.

SUGGESTED RESPONSIBILITIES

The following are suggested responsibilities of the design professional, roof panel manufacturer, and snow retaining/heat tape manufacturer to ensure the successful installation of these products:

1) Design Professional:

- The overall design of the roof system and how it will function in varying climatic conditions (including the determination of what, if any, snow & ice retention or heat tape systems are used) is the responsibility of the design professional (i.e. architect, engineer, roofing contractor, roof consultant, etc.).
- The design professional should determine what, if any, snow & ice retention and/or heat tape systems are to be used on a project. The design professional should also consider how snow and ice will exit the roof.
- The design professional should contact the snow & ice and/or heat tape system manufacturer for recommendations of which system(s) are best suited for the project and what layout, spacing, attachment, etc. should be used to handle the anticipated snow and ice loads for the structure. As a minimum, the design snow loads required by building codes and local building authorities shall be used in this determination.
- The type of roof material, the panel finish, and the roof panel's configuration (e.g. minor ribs, embossed panels, etc.) may limit which type of snow-retaining system can be used.
- Advise the roof panel manufacturer of any increased design loads due to the weight of the retained snow and ice.
- Include snow & ice retaining and/or heat tape system installation and layout requirements in the project documents (i.e. plans and specifications, addendums, etc.).

All information stated in the product sheet is correct at time of publication and subject to change without notice, check our website for the latest version.
©2026 ASC Profiles LLC All rights reserved. 0926 web

ADDRESSING SNOW & ICE

3) Roof Panel Manufacturer:

- Provide a sample roof panel or a dimensioned drawing of the roof panel when requested by the design professional so that suitable attachment of the retaining system to the roof panel can be determined.
- Though mechanically seamed panel samples are available, final seam configuration is not achievable without special tools. Dimensioned drawings of the installed roof panel configuration are typically used with these types of roof panels.
- Advise the design professional how the method of attaching the snow or ice retaining system may affect the performance of the roof system. Snow & Ice Retaining or Heat Tape

4) Manufacturer:

- Advise the design professional on which of their systems are best suited for the roof panel and climatic conditions of the project.
- Recommend a layout of the snow & ice retaining and/or heat tape system or supply the design professional with sufficient information to allow them to determine an appropriate system layout.
- Recommend procedures for attaching the snow & ice retaining or heat tape system to the roof panels.
- Exposed copper or other metals that react negatively to steel should be avoided at all costs to prevent dissimilar metals from interacting.

IN SUMMARY

AEP Span's position is neutral regarding the use of snow & ice retaining and/or heat tape systems. We recommend neither for, nor against, their usage. If such devices are ultimately used, they must not impede the thermal movement (expansion & contraction) of the metal roof system, compromise its weather tightness, or be of a dissimilar metal to the roof materials.

Note that this bulletin is not intended to be a complete or exhaustive discussion of these specialty products or systems but rather to present common aspects of their use with metal roofing. The designer or manufacturer of these specialty products or systems should be consulted for project specific recommendations and guidance.

Customer Service Centers
Tacoma, WA
Phone: 800-733-4955
Fax: 253-272-0791

All information stated in the product sheet is correct at time of publication and subject to change without notice, check our website for the latest version.
©2026 ASC Profiles LLC All rights reserved. 0926 web

AEP SPAN TECHNICAL BULLETIN #6

FALL RESTRAINTS AND METAL ROOFING

INTRODUCTION

AEP Span receives many inquiries regarding fall restraint systems (arresting devices) and their attachment to metal roofing. Metal roofing systems, and primarily standing seam systems provide a visible opportunity for attaching fall protection devices. Unfortunately, the loads that fall restraint devices are required to withstand are far beyond the capacity of our metal roof panels, clips, and fasteners. Simply put, AEP Span's roof systems would fail under the extreme loads these devices require.

A review of the OSHA requirements governing fall restraint devices:

OSHA (FEDERAL REQUIREMENTS)

1926.760(d)(2)

"Fall arrest system components shall be used in fall restraint systems and shall conform to the criteria in § 1926.502 (see Appendix G). Either body belts or body harnesses shall be used in fall restraint systems."

1926.502(d)(15)

"Anchorages used for attachment of personal fall arrest equipment shall be independent of any anchorage being used to support or suspend platforms and capable of supporting at least 5,000 pounds (22.2 kN) per employee attached, or shall be designed, installed, and used as follows: as part of a complete personal fall arrest system which maintains a safety factor of at least two; and under the supervision of a qualified person."

ADDITIONAL REQUIREMENTS/STANDARDS

ANSI Z359.18

Safety Requirements for Anchorage Connectors for Active Fall Protection Systems consensus standard; more stringent requirements than OSHA. Available through ANSI.org

ANSI Z359.1

(obsolete consensus standard)

While there are several fall restraint systems that attach directly to metal roofing seams, AEP Span is unaware of any systems that have included complete load path evaluation – not just attachment of the fall restraint device to the panel seam, but also the loads imparted upon the panel & panel clip connection, the panel clip to clip fastener connection, and the panel fastener to substrate connection.

In addition, we are aware that most fall protection systems are evaluating OSHA loads for the downslope load direction (falls over eave), but loads perpendicular to the panel seams (falls over gable edge) also need to be accounted for. Loads in this direction induce complicated prying of panel systems that should also be evaluated.

IN SUMMARY

AEP Span's roof systems are not designed to handle OSHA's high fall protection load requirements. AEP Span recommends that fall restraint anchorages be attached directly to the main building structure, independent of the metal roof system. Standard roof penetration flashing details are then incorporated to ensure a watertight connection.

Additional information regarding recommended fall restraint anchor types and associated flashing details is available upon request.

Customer Service Centers
Tacoma, WA
Phone: 800-733-4955
Fax: 253-272-0791

All information stated in the product sheet is correct at time of publication and subject to change without notice, check our website for the latest version.
©2026 ASC Profiles LLC All rights reserved. 0926 web

AEP SPAN TECHNICAL BULLETIN #7

ROOFING UNDERLAYMENTS

INTRODUCTION

Specifying underlayments for metal roofing often comes down to three basic needs. The first need for the installer and general contractor is to "dry the building in" so other work can proceed within the building. Second is for the owner and pursuer of a weathertightness warranty is to protect against the chance that moisture will penetrate the metal roof system and act as a secondary moisture barrier. Third is to allow a means of escape for 'back side' condensation which may occur in certain metal roof applications; this condensation must be directed out of the system. In all three cases the underlayment is intended to ultimately direct any moisture to the outside of the building envelope.

This technical bulletin will look at the different types of underlayments used with metal roofing. The discussion of underlayments within this document does not include internally driven vapor barriers; those used to block moisture originating from inside the building (ie. such as a natatorium). The main types of underlayment reviewed within this bulletin are: felts, rosin paper, polyethylene plastic, synthetic underlayments, and self-adhering membranes.

ASPHALT SATURATED FELT

The selection of this felt is often driven by the project specifications and cost. 30# asphalt saturated felt is perhaps the most widely used underlayment and most readily available. 30# felt installed and lapped horizontally with roofing nails and caps is adequate as a moisture barrier. Alternatively, two layers of 15# felt can be used but it does not lend itself to installation activity and wind conditions. Often one layer of 15# is installed and then shortly before the panel installation another layer is added. The down side of felt is that it may not be a durable, lasting underlayment for metal panel installation activities, it is not durable during windy conditions and has a relatively short life when exposed to the elements.

The use of asphalt saturated felt under metal roofing is perhaps the cheapest, most accessible, and most widely used. Unfortunately, even after a few short weeks of exposure, it will have less and less effectiveness as a water shedding material. Exposed and weathered felt eventually becomes a liability and must either be replaced or covered. The use of asphalt felt may work well if metal roofing can be installed within a few weeks. Asphalt roofing felts that have been over-exposed, dried out, curling, wrinkled, torn from wind damage, and/or patched may not provide the protection and performance that is needed. Extremely weathered felt may actually retain moisture under the metal roofing and exacerbate water infiltration damages. Additionally, temperatures reached in certain conditions underneath the metal roof may cause the asphaltic material to become viscous and "run", potentially leaving unsightly streak marks outside of the building envelope."

ROSIN PAPER

Rosin paper is not considered a moisture barrier under metal roofing. The discussion of rosin paper within this bulletin is to clarify its use as a slip sheet. Slip sheets are traditionally used to prevent adhesion of asphalt felt to the back side of metal roof panels. As the metal roofing expands and contracts during the daily thermal cycle the movement can displace, and even tear, the asphalt felt underlayments. Because aluminum and copper have much higher thermal expansion rates than steel the use of a rosin paper slip sheeting is more prevalent with these roofing materials. The use of a slip sheet under steel roofing is not a requirement for roofing warranties. There are questions as to whether rosin paper could actually retain any moisture that may infiltrate into the system rather than encouraging moisture to migrate out of the building envelope.

POLYETHYLENE PLASTIC

Polyethylene plastic is not a recommended underlayment for metal roofing. Even though polyethylene is an effect water barrier and is inexpensive, the material does not hold up well under prolonged expose to sun and heat. The long-term effects from radiant heat under metal panels is unknown with this product. Polyethylene does not perform well with fastener penetrations and has poor resistance to tears in the installation process. Plastic also does not provide adequate slip resistance on sloped surfaces and gets worse with the presence of dust and moisture. The perm rate for this material is very high, to the point that it can possibly trap moisture at its' surface.

SYNTHETIC UNDERLAYMENT

Synthetic underlayments are relatively new in the U.S. and have continued to evolve over the last ~20 years. A number of these polymer based synthetic underlayments have been used with considerable success. The initial aim of synthetic underlayments was to replace asphalt saturated felt in the market. The success of these products has been overwhelming. The cost of synthetic underlayments is roughly double that of asphalt felt. That said, the list of advantages that synthetic has over asphalt felt is significant. Some of the key advantages:

Lighter Weight: Synthetics are roughly 1/5 the weight of asphalt felt. This allows for bigger rolls, and significantly more coverage per roll, resulting in lower installation costs.
Resistance to tearing – These underlayments have up to 10X the tear strength of asphalt felt. The tear resistance is very effective against winds as well as installation traffic and other construction activity.

Exposure or UV Resistance: Most synthetic brands list acceptable exposure times of up to six months. The much improved tear resistance and long-term exposure are perhaps the biggest advantages of synthetics.

All information stated in the product sheet is correct at time of publication and subject to change without notice, check our website for the latest version.
©2026 ASC Profiles LLC All rights reserved. 0926 web

ROOFING UNDERLAYMENTS

Moisture Penetration: Appears to be very good for synthetic underlayments with data sheets indicating perm rates such as .05. Perm rates for asphalt felt in good condition are in the range of .02.

Some concerns exist regarding how well the synthetics manage fastener penetration. With 30# asphalt felts the theory is that the fastener head compression against the felt will cause the oil in the felt to flush together creating an added level of moisture protection. With synthetic underlayments the protection is less clear; underlayment manufacturers strongly encourage the use of plastic capped underlayment fasteners to both reduce the opportunity for water intrusion, as well as improve the retention of the underlayment to substrate. Synthetic underlayments don't have to be used across the entirety of the roof; they can be used in combination with self-adhering membranes in the lower slopes, valleys, eaves, etc. (the more risk prone areas) to provide a more complete, cost effective underlayment solution.

Future use of synthetic underlayments will only continue to expand and continued product improvements will occur as well. Note that exact compositions of synthetic underlayments are very proprietary and vary notably from one manufacture to another. Proper research should be done to select the most appropriate underlayment for the application.

SELF-ADHERING MEMBRANE

Self-adhering membranes are considered the foremost underlayment for metal roofing. The key attributes of these products provide for the best protection. Some of these attributes are:

Self Healing: Holes created by fasteners installed through membrane underlayments tend to seal around the fasteners, reducing the possibility of moisture penetration.

Preparation: Each of these products have specific requirements at installation such as surface priming of substrates. Thorough cleaning of substrates and removal of protrusions, decking voids, etc. may be required to improve adhesion and reduce opportunity for underlayment damage.

Exposure Time: Ranges from 30 to 90 days. Longer exposure times may produce uneven underlayment surfaces.

Temperature Resistance: Self-adhering, high-temperature underlayments are designed specifically for use under metal roofing systems in order to protect against the high temperatures that are possible under metal roofing systems.

Variations: Some versions of this product are only made for composition shingles and may not have enough temperature ratings or flow temperature to be suited for metal roof applications.

Targeted Usage: Self adhering membranes are often used in combination with felts or synthetics such that eaves, valleys and perhaps hips and ridges are stripped with several feet of membrane and the balance of the roof with the less expensive product.

Compatibility: Some self-adhering underlayment manufacturers caution against physical contact with EPDM, creosote, wood pitch (resin), gasoline/oil/diesel fuels, flexible PVC and numerous solvents. Adhesion can also be an issue for some substrates such as polystyrene (Styrofoam).

As with any underlayment usage, consult all product usage and installation requirements with the manufacturer and also ensure the product's compatibility with metal roofing.

RADIANT BARRIERS

In recent years, radiant barriers with very low perm rates are also being utilized under metal roofing. These radiant barriers not only act as vapor barriers but also provide resistance to heat transfer into or out of the building envelope.

SPECIAL CONSIDERATIONS

Fire Rated Underlayments

Most underlayments on the market have fire resistance ratings. These fall into two primary categories:

- Those that specifically boost a metal roofing assembly to a Class A fire resistance rating when the product is installed over combustible wood substrates. A couple of the select industry underlayments that meet these stringent requirements include:
  - GAF "VersaShield Underlayment"
  - Polyglass USA Inc "Polystick XFR"
- Underlayments that may be used as a component of a Class A rated assembly, but their inclusion does not impact the rating of the fire rated assembly. UL typically defines these products as follows: "Ply Sheet (Optional): — Any UL Classified Type G1, G2 or G3 base/ply sheet, Type 15, 20 or 30 felt or UL Classified prepared roofing accessory." AEP Span Underlayment HT falls into this category.

Consult the AEP Span UL listings for approved underlayments and constructions for Class A rated assemblies.

AEP Span Weathertightness Warranties

- **Full System Weathertightness Limited Warranties** issued by AEP Span require the use of AEP Span Underlayment HT. AEP Span Underlayment HT may be omitted on warranty projects if a project is installed over open framing which does not require underlayment usage. Projects specifying Class A fire rated assemblies may require an alternate roof underlayment or a combination of underlayments to satisfy fire resistance requirements.

- **Side Seam Warranties** issued by AEP Span have reduced underlayment restrictions. AEP Span Underlayment HT is acceptable for use. Most other underlayment types described within this bulletin are also allowed for Side Seam Warranty purposes if specified and approved for use under metal roofing by the underlayment manufacturer.

All information stated in the product sheet is correct at time of publication and subject to change without notice, check our website for the latest version.
©2026 ASC Profiles LLC All rights reserved. 0926 web

ROOFING UNDERLAYMENTS

AEP Span Coating/Substrate Warranties

The only requirement for AEP Span coating and substrate warranties is that the underlayment directly below the roofing panels not have a granular surface. There is a significant concern that the granular surface may scratch and damage the wash coat and metallic coating on the underside of the metal panels allowing any moisture to deteriorate the panel substrate integrity.

IN SUMMARY

There are a few primary types of roofing underlayments used with metal roofing – asphalt saturated felt, rosin paper (slip sheeting), synthetic underlayments, and self-adhering membranes. There is also a large number of variations/formulations to these as well, especially with the synthetics. This bulletin provides some general guidance however it is ultimately the responsibility of the specifier or design professional to select the proper underlayment based on each project's physical and environmental requirements.

Customer Service Centers
Tacoma, WA
Phone: 800-733-4955
Fax: 253-272-0791

All information stated in the product sheet is correct at time of publication and subject to change without notice, check our website for the latest version.
©2026 ASC Profiles LLC All rights reserved. 0926 web

AEP SPAN TECHNICAL BULLETIN #8

LIGHTNING PROTECTION SYSTEMS

INTRODUCTION

A lightning protection system provides a direct, continuous electrical path from the building rooftop down to earth. These systems are installed to reduce the risk to electrically and thermally sensitive building materials from lightning strikes. When these systems are properly designed and installed, the lightning's electrical discharge will follow a safe, conductive path to the ground.

Metal roofing also acts as an electrical conductor, dissipating the electrical charge across the roof surface during a lightning strike. Metal roofing is also a noncombustible material. Both of these benefits are significant and make metal a very desirable roofing material. That said, metal roofing is not a complete lightning protection system, so a properly designed and installed system is important in lightning prone areas.

INSTALLATION CONSIDERATIONS

Dissimilar Metals

Regarding the installation of lightning protection systems, one of AEP Span's primary recommendations is to always avoid the use of dissimilar metals. Galvanic corrosion will occur when two dissimilar metals come into contact with each other, especially in the presence of moisture. AEP Span's Zincalume® (aluminum-zinc) coated steel panels should not be in contact with, or be exposed to runoff from, roofing accessories (including lightning protection systems) that utilize copper, brass, graphite, and/or lead. AEP Span recommends that aluminum components be used for lightning protection systems. Aluminum does not significantly react when in contact with Zincalume® coated steel roof panels.

Contact AEP Span if there are further questions or concerns regarding the topic of dissimilar metals.

Attachment

AEP Span recommends that standing seam clamps (S-5!® clamps or similar) be utilized for the attachment of lightning protection systems. The use of seam clamps helps reduce unnecessary roof penetrations by allowing the attachment of lightning protection systems directly to the roof panel standing seams. In some applications there may not be a location for a seam clamp to be utilized (i.e. along gable edges or with corrugated panels). In these cases it may be desirable to utilize mounting pads that are adhesively attached to the panel surface.

It is important that mounting pads utilize an appropriate adhesive that will bond to Zincalume® or Kynar® coated steel panels. Using an adhesive that does not bond well to these surfaces, or that negatively reacts to these surfaces, can impact the overall performance of the lightning protection system and the metal roof system.

Note: AEP Span's limited warranties do not cover seam damage, paint scratches, paint or coating issues from adhesives, or other damage that occurs from installation or use of lightning protection systems and their components.

Customer Service Centers
Tacoma, WA
Phone: 800-733-4955
Fax: 253-272-0791

All information stated in the product sheet is correct at time of publication and subject to change without notice, check our website for the latest version.
©2026 ASC Profiles LLC All rights reserved. 0926 web

AEP SPAN TECHNICAL BULLETIN #9

PREVENTING STORAGE CORROSION

INTRODUCTION

Pre-painted and galvanized building panels and components have been successfully used for many years. In general, properly installed building materials under normal service conditions have excellent corrosion resistance. However, pre-painted and bare building materials are subject to premature corrosion failures prior to installation, if they are not handled and stored properly. Excessive storage periods or poor storage conditions often result in water intrusion. Prolonged exposure to wet conditions can cause paint blistering and galvanized substrate corrosion or staining in as little as 2 weeks.

ENVIRONMENTAL AND SERVICE CONDITIONS

Water is a necessary prerequisite for corrosion of stored panels or components. When water or water vapor is available along the sides of a panel bundle or a column/purlin stack, it may penetrate between the panels or parts by capillary action. If proper precautions are not taken during transport, water may be present upon delivery at the job site. Material must be inspected at the time of delivery. Ambient humidity and temperature cycles will also promote water intrusion into stored bundles and stacks through condensation. Finally, rain and snow are other potential sources of water that can cause storage corrosion and staining. Besides water, two other important factors that contribute to the corrosion are temperature and exposure time. Corrosion will accelerate with increased temperature. Given enough time, panel bundles, columns and/or purlins will eventually become wet and storage corrosion and staining may occur. Storage corrosion can be prevented by:

- Reducing site storage time.
- Decreasing water contact.
- Moderating temperature extremes.

STORAGE

Prolonged storage will always increase the likelihood of storage corrosion; therefore, the best prevention is to minimize the storage time. Proper storage limits the collection of water from rain, snow and condensation on the panel surfaces. Under roof storage is always preferred. If panel bundles or other components have to be stored outdoors, a number of precautions must be taken to prevent storage corrosion. Material should be stored in a level area out of the way of other activities to minimize the number of movements required. If the material is stored on the ground, i.e. dirt, grass or gravel, a plastic ground cover must be put down to minimize condensation of water from the ground onto the panels or components. The material must then be raised off the plastic ground cover to avoid contact with water puddles, and allow for air circulation to promote drying of condensed water. The material must be stored on an angle, or slope, to promote drainage of water.

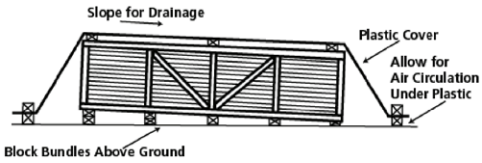

Wet, uncured or pretreated lumber should not come in contact with the material. Sufficient support must be provided to the raised and angled material to avoid excessive bowing, which may result in low spots that could hold water.

Example of proper storage:

REMEDIES

Storage corrosion on pre-painted material cannot be remedied. Once the corrosion process has begun the film integrity of the paint is compromised. Panels displaying any type of corrosion or paint bubbling should not be installed. Light corrosion or staining (white or black in color) on bare galvanized material may be cleanable; contact your AEP Span representative for proper cleaning techniques.

References:

1. National Coil Coating Association, Tool Kit #1 "Preventing Job Site Storage Corrosion of PrePainted Building Materials"
2. GalvInfo Center, GalvInfoNote 3.2 "Protecting Galvanized Steel Sheet Products from Storage Stain"

Customer Service Centers
Tacoma, WA
Phone: 800-733-4955
Fax: 253-272-0791

For most current versions of literature please visit
www.aepspan.com

All information stated in the product sheet is correct at time of publication and subject to change without notice, check our website for the latest version.
©2026 ASC Profiles LLC All rights reserved. 0926 web

AEP SPAN TECHNICAL BULLETIN #10

TOUCH-UP PAINT

Scratches and very minor damage may occur during handling and installation of painted roofing and wall panels. In these instances, it may be desirable to use touch-up paint to repair the blemishes. Keep in mind, touch-up paints are quick fixes and when used properly, will result in a satisfactory appearance. Misuse or over-use can result in spoiling the overall appearance.

The paint systems used on factory painted steel have a built-in color and gloss retention that is only achieved through the oven-baked process. Air-dried paints will fade and chalk much faster than the oven-baked. These different weathering characteristics must be taken into consideration when touch-up work is contemplated. Nothing looks worse than the blotchy appearance of excessive touch-up painting. Superficial scratches which are not too obvious from a distance of 6-9 feet will likely be obscured by normal soiling and weathering. If you decide to use touch-up paint, use it sparingly and only to cover up those areas where paint has been removed. A paint pen or 1/4" artist brush should be used for these repairs.

Edges of deep scratches should be lightly sanded or “feathered” with #400 grit sandpaper. If a scratch extends through the paint and the protective metal layer exposing raw steel, it should be treated with a zinc-rich or similar primer before touch-up application. If feathering and/or priming are not necessary, areas to be touched-up should at least be wiped with mineral spirits to remove dirt, wax or other contaminants before colored touch-up is applied.

The recommended paint types for touch-up are air dry PVDF or acrylic silicone paint. Acrylic silicone paints can be found at local paint stores. For air dry PVDF we recommend the following suppliers:.

https://nanochemtechnologies.com/

https://usa.specialistpaints.com/

Special attention should be given to the manufacturer’s instructions; including direct skin or eye contact, ventilation and potential flammability. Aerosol or spray applications are not recommended for blemish or scratch repairs. The best tool for this type of repair is a paint pen or good quality, 1/4-in. artist brush. Only the narrow edge of the paintbrush should actually contact the scratch or blemish.

Customer Service Centers
Tacoma, WA
Phone: 800-733-4955
Fax: 253-272-0791

All information stated in the product sheet is correct at time of publication and subject to change without notice, check our website for the latest version.
©2026 ASC Profiles LLC All rights reserved. 0926 web

AEP SPAN TECHNICAL BULLETIN #11

ROOF SYSTEM CARE AND MAINTENANCE

Our high quality roof systems are designed to be installed to offer uncompromising value and ease of maintenance throughout the life of the roof. Your roof system should be inspected annually to ensure flashings, roof panels, and roof conditions are still in good working order.

The following operating and maintenance instruction will ensure that your roof system performs for years to come.

CLEAR ROOF PANELS AND GUTTERS FROM DEBRIS ACCUMULATION

The build-up of foliage and dirt can block runoff and clog gutters and downspouts. Ensure the roof system and gutters are cleared of any accumulating debris.

CHECK EXPOSED FASTENERS (If applicable)

Though your roof is designed for concealed fastener attachments, some flashing and roof penetration conditions may utilize exposed fasteners. Those fasteners include self-sealing gasket head fasteners and pop rivets. Check the condition of the fasteners to ensure the self-sealing gaskets are in good working order and have not been over driven or deteriorated. Rivets and fasteners should be secured tightly to the roof panels or flashing and should not be loose or backed out.

CHECK CONDITION OF EXPOSED SEALANTS (If applicable)

Just like fasteners, our roof systems are design to be used with little to no exposed sealant. Exposed sealant may have been used to seal roof penetrations and select flashing conditions. If there is any exposed sealants on your roof system, check that the sealant is in good working order. Deterioration, cracks, or pinholes in the sealant are a red flag that the sealant may have reached the end of its lifecycle and should be replaced.

CHECK FOR STANDING OR PONDING WATER (low slope applications)

Standing or ponding water can be detrimental to the coating of the roof system if left for an extended period of time.

MINIMIZE FOOT TRAFFIC

The paint systems are not design to handle a heavy volume of foot traffic and should be minimized to prevent damage. Periodic inspections and maintenance are encouraged. However, if the roof system is intended for heavy foot traffic, roof mounted walkways should be utilized.

The factory-applied finish used on pre-painted steel is extremely durable and will last many years longer than ordinary conventional field applied paint. However, it may be desirable for cosmetic purposes to clean the finish occasionally to ensure the longevity of the paint and roof system.

Dirt pickup may cause discoloration on the finish when it has been exposed to dirt-laden atmospheres for long periods of time. Additionally, slight chalking will ultimately cause some change in appearance in areas exposed to sunlight. A thorough cleaning will often restore the appearance of the panels and render repainting unnecessary. An occasional subsequent light cleaning will help maintain good appearance.

SWARF STAINING (Rust Spotting/Metal Filings)

During installation, improper techniques in cutting and drilling of pre-painted steel can cause rust spotting. Hot chips from drilling or self-tapping screws, or chips from metal saws or cutting discs may embed themselves in the paint finish. These chips can then rust and form unsightly red spots in the coating, giving the visual impression that the substrate may be rusting. It is imperative to brush off any chips which are stuck to the painted surface. A stiff bristle nylon brush is recommended. **See AEP Span Technical Bulletin #37 Swarf Staining on Steel Roof and Wall Products**.

CLEANING

In some cases, simply washing with plain water, using a hose or pressure spray, would be adequate. For areas where dirt collection is heavier or more persistent, a solution of water and detergent (1/3 cups of Tide® per gallon of water, for example) may be used. A clear water rinse should follow immediately. If Product is installed in a mild marine environment, less than 1 mile and greater than 1000 feet from breaking surf, Product should be washed two times per year.

Mildew may occur in areas subject to high humidity. Mildew spores can grow in dirt deposits, even on factory baked finishes. To remove mildew along with the dirt, the following solution is recommended:

1/3 cup detergent (Tide® for example)

2/3 cup Sodium Phosphate (Soilex for example)

1 quart 5% Sodium Hypochlorite solution (Clorox for example)

3 quarts of water

Strong solvent and abrasive type cleaners should be avoided, as they may damage the finish. Caulking compounds, oil, grease, tars, etc., can be removed by mineral spirits applied only to those areas which are contaminated. Always follow the use of the mineral spirits with detergent cleaning and clear rinsing.

Customer Service Centers
Tacoma, WA
Phone: 800-733-4955
Fax: 253-272-0791

All information stated in the product sheet is correct at time of publication and subject to change without notice, check our website for the latest version.
©2026 ASC Profiles LLC All rights reserved. 0926 web

AEP SPAN TECHNICAL BULLETIN #12

WALL SYSTEM CARE AND MAINTENANCE

Our wall systems are designed to be installed for years of uncompromising value and ease of maintenance throughout the life of the wall system. Your wall system should be inspected annually to ensure flashings, wall panels and wall conditions are still in good working order.

The following operating and maintenance instruction will ensure that your chosen wall system performs for years to come.

CLEAR WALL PANELS FROM DEBRIS ACCUMULATION

Keep dirt, irrigation, drainage, vegetation and weed whips away from all wall panels. Do not allow direct contact. Failure to do so can lead to early deterioration.

CHECK EXPOSED FASTENERS (If applicable)

AEP Span manufactures wall panels with both concealed and exposed attachment. Select panels, flashing and wall penetration conditions may utilize exposed fasteners. Those fasteners include self-sealing gasket head fasteners and pop rivets. Check the condition of the fasteners to ensure the self-sealing gaskets are in good working order and have not been over driven or deteriorated. Rivets and fasteners should be secured tightly to the wall panels or flashing and should not be loose or backed out.

CHECK CONDITION OF EXPOSED SEALANTS (If applicable)

Our wall systems are design to be used with minimal exposed sealant. Exposed sealant may have been used to seal wall penetrations, windows, doors and select flashing conditions. If there is any exposed sealants on your wall system, check that the sealant is in good working order. Deterioration, cracks or pinholes in the sealant are a red flag that the sealant may have reached the end of its lifecycle and should be replaced.

CHECK FOR STANDING OR PONDING WATER ALONG THE BASE OF A WALL CONDITION

Standing or ponding water can be detrimental to the coating of the wall system if left for an extended period of time.

MINIMIZE EXPOSURE

Prolonged contact with vegetation, dirt or gravel, sustained exposure to animals or animal waste, or where the product is in contact with, or subject to runoff from lead, copper, CCA, ACQ, CA, pressure treated, green or wet lumber, or wet insulation or other treated lumber (outdoor wood) or fire retardant impregnated or treated wood shakes can all be detrimental to the steel and factory coating.

The factory-applied finish used on pre-painted steel is extremely durable and will last many years longer than ordinary conventional field applied paint. However, it may be desirable for cosmetic purposes to clean the finish occasionally to ensure the longevity of the paint and wall system.

Dirt pickup may cause discoloration on the finish when it has been exposed in dirt-laden atmospheres for long periods of time. Additionally, slight chalking will ultimately cause some change in appearance in areas exposed to sunlight. A thorough cleaning will often restore the appearance of the panels and render repainting unnecessary. An occasional subsequent light cleaning will help maintain good appearance.

SWARF STAINING (Rust Spotting/Metal Filings)

During installation, improper techniques in cutting and drilling of pre-painted steel can cause rust spotting. Hot chips from drilling or self-tapping screws, or chips from metal saws or cutting discs may embed themselves in the paint finish. These chips can then rust and form unsightly red spots in the coating, giving the visual impression that the substrate may be rusting. It is imperative to brush off any chips which are stuck to the painted surface. A stiff bristle nylon brush is recommended. **See AEP Span Technical Bulletin #37 Swarf Staining on Steel Roof and Wall Products.**

CLEANING

In some cases, simply washing with plain water, using hoses or pressure sprays, will be adequate. For areas where dirt collection is heavier or more persistent, a solution of water and a detergent (1/3 cups of Tide per gallon of water, for example) may be used. A clear water rinse should follow immediately. If Product is installed in a mild marine environment, less than 1 mile and greater than 1000 feet from breaking surf, Product should be washed two times per year.

Mildew may occur in areas subject to high humidity, and mildew spores can grow in dirt deposits, even on factory baked finishes. To remove mildew along with the dirt, the following solution is recommended:

1/3 cup detergent (Tide® for example)

2/3 cup Sodium Phosphate (Soilex for example)

1 quart 5% Sodium Hypochlorite solution (Clorox for example)

3 quarts of water

Strong solvent, abrasive type cleaners and pressure washers should be avoided, as they may damage the finish. Caulking compounds, oil, grease, tars, etc., can be removed by mineral spirits applied only to those areas which are contaminated. Always follow the use of the mineral spirits with detergent cleaning and clear rinsing.

Customer Service Centers
Tacoma, WA
Phone: 800-733-4955
Fax: 253-272-0791

All information stated in the product sheet is correct at time of publication and subject to change without notice, check our website for the latest version.
©2026 ASC Profiles LLC All rights reserved. 0926 web

AEP SPAN TECHNICAL BULLETIN #13

CLEANING COIL COATINGS

Coil Coatings present a relatively non-adherent, inert surface to airborne soil. If needed, a variety of methods for removal of surface deposits is available. However, note these precautions: Do not use wire brushes, steel wool, sandpaper, abrasives or other similar cleaning tools which will mechanically abrade the coating surface. Some of the cleaning agents listed below should be tested in an inconspicuous area before use on a large scale. Always test a small area first.

HOT OR COLD DETERGENT SOLUTIONS

A 5% solution in water of commonly used commercial and industrial detergents will not have any deleterious effect on a Coil surface. These solutions should be followed by an adequate rinse of water. Use cloth, sponges or a soft bristle brush for application. Cleaning should be done on the shaded side of the building or, ideally, on a mild, cloudy day.

SOLVENTS

Most organic solvents are flammable and/or toxic, and must be handled accordingly. Keep away from open flames, sparks and electric motors. Use adequate ventilation, protective clothing and goggles. Remove non-water soluble deposits (tar, grease, oil paint, graffiti, etc.) from Coil surfaces using these solvents with caution:

Alcohols

- Denatured alcohol (ethanol)
- Isopropyl (rubbing) alcohol
- Methanol (wood alcohol)

Petroleum Solvents

- VM&P naphtha
- Mineral spirits
- Turpentine (wood or gum spirits)

Aromatic Solvents

- Xylol (xylene)
- Toluol (toluene)

These solvents should be used with caution on a Coil surfaces. Limit contact to five minutes. Test a small area first.

Ketones, Esters, Lacquer Thinner

- Methyl ethyl ketone (MEK)
- Methyl isobutyl ketone (MIBK)
- Ethyl acetate (nail polish remover)
- Lacquer thinner

These solvents should be used with great caution on a Coil surface. Limit contact to one minute. Test a small area first. Panel manufacturer and coating supplier are not responsible for damage from unrestricted use of these.

Acetone/Paint Remover

Do not use acetone or paint remover on Coil surfaces.

CHEMICAL SOLUTIONS

- Sodium hypochlorite solution (laundry bleach, Clorox)
- Hydrochloric acid (muriatic acid)
- Oxalic acid
- Acetic acid (vinegar)

Hydrochloric acid (10% muriatic acid), diluted with ten volumes of water, may assist in removing rust or alkali mortar stains from Coil surfaces. Limit contact to five minutes. Caution: Acid solutions are corrosive and toxic. Flush all surfaces with water after use. Oxalic acid solutions or acetic acid (vinegar) may be used for the same purpose. Flush with water after use. Laundry bleach may assist in removing certain stains.

CLEANING

In some cases, simply washing with plain water, using a hose or pressure spray, would be adequate. For areas where dirt collection is heavier or more persistent, a solution of water and detergent (1/3 cups of Tide® per gallon of water, for example) may be used. A clear water rinse should follow immediately. If Product is installed in a mild marine environment, less than 1 mile and greater than 1000 feet from breaking surf, Product should be washed two times per year.

Mildew may occur in areas subject to high humidity. Mildew spores can grow in dirt deposits, even on factory baked finishes. To remove mildew along with the dirt, the following solution is recommended:

1/3 cup detergent (Tide® for example)

2/3 cup Sodium Phosphate (Soilex for example)

1 quart 5% Sodium Hypochlorite solution (Clorox for example)

3 quarts of water

EXCESS SEALANT REMOVAL

Precautions should be taken to prevent sealants from getting on the painted surface. Sealants may be very difficult to remove. If any does get on a Coil surface, it should be removed promptly with a solvent such as alcohol or a naphtha type. Caution: It may be possible for solvents to extract materials from sealants which could stain the painted surface or could prove harmful to sealants; therefore, these possible effects must be considered. Test a small area first.

Customer Service Centers
Tacoma, WA
Phone: 800-733-4955
Fax: 253-272-0791

All information stated in the product sheet is correct at time of publication and subject to change without notice, check our website for the latest version.
©2026 ASC Profiles LLC All rights reserved. 0926 web

AEP SPAN TECHNICAL BULLETIN #14

REMOVAL OF STUBBORN STAINS, SEALANTS, & PEEL COAT

This bulletin defines what chemicals are acceptable for cleaning stubborn stains, sealant, or strippable film from the surface of AEP Span roof or wall panels.

STUBBORN STAINS OR SEALANT

AEP Span recognizes the following chemical solutions to be used to removed stains while not adversely affecting the paint coatings:

- **World's Best Sensitive Surface Graffiti Remover (SSGR)*** www.graffitiremovalinc.com/products/sensitivesurfacegraffitiremover
- **Denatured Alcohol**
- **Mineral Spirits**
- **Naptha** (Not available in California)
- **WD-40®**
- **Goo Gone**

Note: A small panel area should be initially selected to determine what the best course of action should be before larger panel areas are subjected to cleaning using these methods.

PEEL COAT (STRIPPABLE FILM)

Prolonged exposure to UV, heat or cold may make removal of the factory applied peel coat difficult.

AEP Span stresses the importance of removing peel coat as soon as possible after receiving products to ensure easy film removal. Prolonged UV exposure, wet conditions or long-term panel storage with film applied will likely make removal very difficult.

For detailed guidelines on removing peel coat or left-over residue see ***Technical Bulletin #15 Peel Coat Guidelines and Best Practices.***

* World's Best Sensitive Surface Graffiti Remover (SSGR) not compatible with Polyester and Silicon Modified Polyester (SMP) coatings.

Customer Service Centers
Tacoma, WA
Phone: 800-733-4955
Fax: 253-272-0791

All information stated in the product sheet is correct at time of publication and subject to change without notice, check our website for the latest version.
©2026 ASC Profiles LLC All rights reserved. 0926 web

AEP SPAN TECHNICAL BULLETIN #15

PEEL COAT GUIDELINES AND BEST PRACTICES

This bulletin details proper jobsite storage, removal and clean-up of panels and flashings supplied with protective peel coat film.

JOBSITE STORAGE

Stored panels and flashings should be protected from exposure to moisture, sunlight and precipitation. It is recommended to store panels and flashings indoors for the utmost protection. If outdoor storage is the only means, it is recommended to store panels and flashings elevated under a water-proof tarp and tilted in such a way to not entrap moisture and facilitate drainage. Exposure to UV light and weather elements can result in excessive adhesion to the surface. The film can also degrade to the point it can no longer be peeled off.

Material with peel coat applied should not be stored for longer than 30 (thirty) days.

REMOVAL OF PEEL COAT

Protective films should be removed gradually beginning at one end peeling back at a 180° degree angle with a smooth even motion. Do not quickly jerk the protective film. Inspect for any adhesive residue once the peel coat is removed. If residue remains on the surface, follow the below cleaning guidelines.

DO NOT remove peel coat in freezing conditions. The recommended temperature range for film removal is between 40° F (16° C) and 90° F(32° C).

Example of peel coat removed in freezing conditions.

DO NOT remove peel coat if panels are wet. Panels and flashings should be moved indoors and allowed to dry before removing the protective film.

Using sunlight to warm or dry the panels and flashings could result in UV degradation of the peel coat. Heat lamps or dryers can be used to warm up or dry off panels.

Peel coat should be removed from installed panels and flashings within 24 (twenty-four) hours.

REMOVAL OF STUBBORN PEEL COAT AND RESIDUE

There are several options available that may aid in removing stubborn peel coat and/or left-over residue.

- Citrus-based hand cleaners (non-abrasive)
- Goo Gone Pro-Power Adhesive Remover
- World's Best Sensitive Surface Graffiti Remover (SSGR) (For use on Dura Tech™ 5000 paint systems only)
- Water applied with portable steam cleaner

As a general rule the peel coat will be resistant to the absorption of the Goo Gone Pro-Cleaner, Citrus-based cleaner and SSGR cleaners.

- Remove a much of the film or residue as possible.
- Panels and flashings must be completely dry before applying cleaners. With the dry substrate out of direct sunlight, saturate the film backing with the selected cleaner. Keep the film saturated with repeated applications until the film swells and softens. The remover needs to wick under the edges of the film which can be aided by gently agitating the film edge with soft bristle brush.
- Once the film has softened, lift and remove with fingernail or by means of scraping with a soft, non-abrasive scraper, being careful not to scratch or damage the panel surface. It is common for only the area of film near the edge to be removed; it may take repeated cycles to remove all the film or residue. For left-over residue, saturating then wiping with a soft cloth may be sufficient.

Example of leftover adhesive residue on panel leg.

- When peel coat or residue is completely removed, a general-purpose surface cleaner may be used with a soft cloth to remove any light haze or residue that remains. Please reference Technical Bulletin #13 Cleaning Coil Coatings for approved painted surface cleaners.
- A portable steam cleaner can also be used to swell and soften the film for easier removal.

Cleaners should always be tested on a small area first. Carefully read and follow the manufacture's precautions and directions. The information provided in this technical bulletin is for general knowledge only; it is not to be considered an exact method for removal of peel coat or adhesive residue.

Care should be taken to avoid cleaners from contacting siding, windows, doors and vegetation.

Follow all local environmental guidelines for proper disposal of cleaning agents.

All information stated in the product sheet is correct at time of publication and subject to change without notice, check our website for the latest version.
©2026 ASC Profiles LLC All rights reserved. 0926 web

AEP SPAN TECHNICAL BULLETIN #16

REFLECTANCE

The coatings world uses a lot of terminology that can become a bit confusing. "Reflectance" is a perfect example of a word that is used to describe two very different properties.

LIGHT REFLECTANCE VALUE

Light Reflectance Value, or LRV, measures the amount of visible or usable light that reflects from a surface. LRV is expressed as a percentage from 0 to 100; the higher the number the more visible light that is reflected. Typically, lighter colors will have a higher value than dark colors, but texture can impact LRV as well. Rough textures tend to reflect less visible light. Gloss and sheen are two other terms used to describe visible reflection of a surface. Gloss is the measurement of visible light at a 60° angle from the surface, while sheen is measured at 85°. High gloss/sheen results in high glare or shine from a surface, while low gloss/sheen surfaces have a flat or matte appearance. Glare, often a concern with pre-painted roofs, is controlled by lowering the sheen value.

SOLAR REFLECTANCE VALUE

Solar Reflectance Value, or SRV, measures the amount of total solar radiation, visible, infrared and ultraviolet, that is reflected from a surface (Total Solar Reflectance, TSR, is used as well). SRV is expressed as a percentage from 1 to 100; the higher the number the more solar radiation that is reflected. As with LRV, light colored objects often have a high SRV while dark colors are low. However, with the advent of "cool" pigments, it is possible for a medium to dark color to have a high SRV. The higher the SRV value the cooler the surface stays in direct sunlight. Gloss and sheen values have no impact on SRV. Note: Solar Reflectance Index, or SRI, is calculated from the SRV and emittance value of a material, therefore it is also different and independent from LRV.

Light Reflectance Value ≠ Solar Reflectance Value ≠ Solar Reflectance Index

LRV and SRV and SRI are NOT the same property and cannot be used interchangeably!

While there is some overlap between LRV and SRV, and many coated surfaces may have similar LRV and SRV values, they are not the same measurement. The examples below demonstrate the differences; while LRV may be similar for colors that are visually the same, the SRV can be vastly different.

COLOR	SRV	LRV	SRI	60° Gloss	85° Sheen
FOREST GREEN 1	30	9	29	10	13
FOREST GREEN 2	17	15	12	13	28
DARK BRONZE 1	32	8	32	11	13
DARK BRONZE 2	6	7	3	7	11
PARCHMENT 1	51	40	58	11	12
PARCHMENT 2	50	51	56	11	20
BLACK 1	30	5	29	21	25
BLACK 2	6	6	3	19	26

Customer Service Centers
Tacoma, WA
Phone: 800-733-4955
Fax: 253-272-0791

All information stated in the product sheet is correct at time of publication and subject to change without notice, check our website for the latest version.
©2026 ASC Profiles LLC All rights reserved. 0926 web

AEP SPAN TECHNICAL BULLETIN #17

DISSIMILAR METALS

INTRODUCTION

AEP Span's steel-based products, painted and bare, feature a metallic-coating that provides long-lasting resistance from corrosion. This coating is applied during the steel production process prior to the application of paint. Metallic-coatings consist of either zinc (sold as TruZinc® or galvanized) or a specialty mix of aluminum and zinc (sold as ZINCALUME®). Care must be taken during the design and installation phase of metallic-coated products to avoid the unintentional creation of galvanic corrosion. This rapid form of corrosion is induced when metals of varying types (dissimilar metals) are installed in direct contact with one another in a **corrosive environment**.

GALVANIC CORROSION

Galvanic or bi-metallic corrosion is a reaction in which one metal will sacrifice itself (or dissolve) to protect the different, less active metal, leading to visible corrosion. Galvanic corrosion occurs between dissimilar metals in certain **corrosive environments** and typically requires three criteria in which to occur:

1. Two or more dissimilar metals,
2. Metal to metal contact, and
3. Both metals to reside in the same conducting solution/**corrosive environment**, i.e. salt air or water.

Metals can be viewed as active or noble based on their position on the galvanic scale, simplified in Table 1 below. The further apart these metals are on this scale, the greater the potential for a reaction between the metals. In addition to the dissimilarity of the metals, the severity of the environment will influence the potential for galvanic corrosion. Common factors influencing environmental severity can include direct proximity to salt water or chemical spray, the frequency of breaking surf (which generates airborne salt-laden particulates), and how frequently the surface is rinsed by rainfall.

More Active Metals (Anode)
- Zinc
- ZINCALUME Steel
- Aluminum
- Steel
- Lead
- Copper
- Stainless Steel

Less Active or Noble Metals (Cathode)

Table 1: Galvanic Series of Metallic Activity

IN APPLICATION

Installations featuring galvanic corrosion are commonly attributed to improper fastener and accessory selection. This includes the use of stainless steel and copper products in direct contact with metallic-coated metal roofing and siding profiles.

Stainless-Steel Hardware (Clips, Fasteners, etc) Galvanic corrosion can be caused by stainless-steel fasteners, rivets, light fixtures, window frames and other accessories recessed in metallic-coated panels in **corrosive environments**. Initially this may appear as the apparent bubbling of the painted metal roof or siding surface around the stainless-steel fixture. Often falsely identified as a paint failure, this bubbling is the steel underneath corroding, resulting in the loss of paint adhesion.

AEP Span's stainless-steel hardware offering, such as clips and fasteners, are not intended to be used with ZINCALUME coated steel profiles in **corrosive environments**. In these environments stainless steel components should be used in conjunction with profiles fabricated out of aluminum.

Copper and Copper Treated Lumber

Metallic coated steel will experience accelerated corrosion when it is in contact with copper, this includes copper treated lumber. Leeching of copper from treated materials, such as through water run-off from rainfall or condensation, can result in corrosion without direct metal to metal contact. In these instances, the protective oxide film which naturally forms on aluminum-zinc coatings is broken down by copper in localized areas. Pitting corrosion ensues which is a highly accelerated form of attack. Zinc coatings are not generally subject to pitting but will demonstrate the effects of galvanic corrosion when installed in direct contact with copper.

AEP Span recommends avoiding the use of copper where galvanic corrosion may be a concern. If the use of copper cannot be avoided, AEP Span recommends that insulated copper or a protective coating over the copper be used to prevent exposure. Any electrical terminals that utilize exposed copper should also be sealed with shrink tape or similar method This includes but is not limited to grounding wire for Photo Voltaic Arrays, Lightning Protection, and Pipe Penetrations.

Galvanized Steel and ZINCALUME Coated Steel

Unpainted galvanized steel must not be used for roofing or rainwater goods (including valleys and gutters) to collect water runoff from ZINCALUME Steel or other more noble metals. ZINCALUME Steel and painted ZINCALUME Steel can be used to collect water from galvanized catchment material. Irrespective of galvanic corrosion considerations, ZINCALUME Steel panels & gutters will typically give a longer service life than traditional galvanized steel. Neither product should be used as catchment material for roofs featuring more noble metals such as aluminum or copper.

Graphite

All materials containing graphite should not be used with or adjacent to ZINCALUME® Steel. This includes washers and also graphite from pencils used to mark ZINCALUME® Steel components.

WARRANTY IMPLICATIONS AND REMEDY

Product deterioration or corrosion created by the improper installation of dissimilar metals will void any warranty supplied by AEP Span. This includes product performance, paint system, and corrosion warranties.

If galvanic corrosion is identified, this issue must be rectified as promptly as possible due to the rapid rate at which it can spread. Remedies may include the replacement of the panels impacted by corrosion and the substitution or relocation of the associated dissimilar metals. For more information on the identification or rectification of galvanic corrosion, **please contact AEP Span**.

Customer Service Centers
Tacoma, WA
Phone: 800-733-4955
Fax: 253-272-0791

All information stated in the product sheet is correct at time of publication and subject to change without notice, check our website for the latest version.
©2026 ASC Profiles LLC All rights reserved. 0926 web

AEP SPAN TECHNICAL BULLETIN #18

Zinc in the Rainwater Runoff from ZINCALUME® Roofs

RE: Zinc in the Rainwater Runoff from ZINCALUME® Roofs

To Whom It May Concern:

ZINCALUME® (Galvalume®) sheet features an alloy coating on the steel that is approximately 55% aluminum and 45% zinc. This coating has been well documented to provide outstanding corrosion resistance and long service life – at least two to four times that of pure-zinc coated roofs (galvanized). Long service life and low corrosion rates mean little zinc is being dissolved from the sheet.

AEP Span is committed to protecting the environment and to providing accurate information and product support to our customers. As an active member of several steel industry trade associations, we are supporting the on-going investigations to identify those factors which influence the amount of zinc present in the rainwater runoff from a ZINCALUME roof. We believe that these factors include but may not be limited to:

1. How much acid is present in the rainfall;
2. The intensity of the rainfall, i.e., how many inches per hour it is raining;
3. The duration of the rainfall, i.e., how long does the rainfall last;
4. The total area of the roof;
5. The temperature of the roof surface.

Predicting the absolute concentration of zinc present in roof runoff for any rainfall situation is nearly impossible, due to the combination of factors above.

We do believe that the amount of acid present in the rainfall is the most important factor. The pH of the rainfall is a measure of how much acid is present. The lower the pH is, the more acidic the rainfall is. Water that has no acid present would have a pH of 7.0. Normal rainfall would have a pH of about 5.4 to 5.6. The reason that normal rainfall has a pH lower than 7.0 is that carbon dioxide is absorbed into the rainfall from the atmosphere. The carbon dioxide produces carbonic acid, a very weak acid. At pH levels from 5.6 down to about 5.0, extremely small quantities of zinc would be present in the rainwater runoff from a ZINCALUME roof.

In the United States, the pH of rainfall west of the Mississippi is most often above pH 5.0. The rainwater runoff from ZINCALUME roofing in those localities is unlikely to contain more than very small trace quantities of zinc, quantities so small they would be barely detectable even using the most sophisticated techniques. As rainfall moves east across the Mississippi, it picks up acid that has been discharged to the atmosphere, primarily by coal fired electric generating plants. The highest concentration of acid in rainfall (the lowest pH) is usually found along the northeast coast of the United States. For the reasons stated at the outset, predicting the quantities of zinc that would be present during rainfalls in this region is difficult and complex. To generate a number and say that this is “the number” is virtually impossible.

Customer Service Centers
Tacoma, WA
Phone: 800-733-4955
Fax: 253-272-0791

All information stated in the product sheet is correct at time of publication and subject to change without notice, check our website for the latest version.
©2026 ASC Profiles LLC All rights reserved. 0926 web

Although the acid rain areas could be expected to produce a higher zinc runoff rate than the western, non-acid rain areas, we believe the zinc concentration in acid rain runoff will still be exceedingly small. One measure of this is the outstanding long-term performance of the ZINCALUME roofs. We have inspected ZINCALUME roofs 20 – 25 years old that are located in acid rain areas. They are without exception in excellent condition and have many years of life ahead of them. This simply would not be the case if the zinc were corroding or dissolving significantly. We nonetheless are supporting studies underway to better understand and characterize the factors that would affect the rainwater runoff from ZINCALUME roofs.

These steel industry associations are investigating methods to remove even trace amounts of zinc from the rainwater runoff. Wetlands are an excellent method for removing zinc. Wetlands change the zinc from a form that is easily dissolved in water to one that is not at all soluble in water, even acidic water. The small quantities of zinc that may be present in the runoff from ZINCALUME roofs are then locked up in the soil and not available for uptake by plants or animals. Other tests are being conducted to determine if non-wetland soil conditions, e.g., topsoil covered with lawn or meadow growth, will also remove zinc from rainwater runoff.

If you need more information or have further questions please feel free to contact AEP Span's Marketing Department at (916) 376-2893.

Sincerely,
AEP Span

Kristen Agin

Kristen Agin
Marketing Manager

ZINCALUME® is a registered trademark of BlueScope Steel
Galvalume® is a registered trademark of BIEC International, Inc.

All information stated in the product sheet is correct at time of publication and subject to change without notice, check our website for the latest version.
©2026 ASC Profiles LLC All rights reserved. 0926 web

AEP SPAN TECHNICAL BULLETIN #19

Color Performamce Data

AEP Span COLOR PERFORMANCE DATA

The Cool Roof Rating Council (CRRC) website lists ASC Building Products SRI Initial and Three-year Aged information. Note - CRRC data is based on averaged color families and does not reflect the actual performance of each specific ASC Building Products color. Therefore, under the LEED column header actual Initial SRI values are provided and reflect actual performance of each color. If required, please note that color specific CRRC Notification of Product Rating letters can be produced upon request.

	CRRC and CA Title 24						LEED								OTHER
	via CRRC product approvals (www.coolroofs.org)					CA Title 24	via Accredited Independent Testing Laboratory (using ASTM C1549, C1371, & E1980)								
PRODUCT DESCRIPTION	CRRC Reference Number	Solar Reflect - ance (Init.)	Thermal Emitt - ance (Init.)	SRI Initial	SRI 3YR Aged		Solar Reflect - ance (Init.)	Thermal Emitt - ance (Init.)	SRI (Init.)	Low Slope	Steep Slope	3YR Aged SRI	Low Slope	Steep Slope	LRV
	Based on CRRC Color Families						Actual tested performance			Leed V4 (Initial SRI)		LEED v4 (Aged SRI) Based on CRRC Color Families			
BARE ZINCALUME®															
ZINCALUME® Plus	1014-0002	0.68	0.30	**64**	**46**	REFER TO CALIFORNIA ENERGY COMMISSION (CEC) REQUIREMENTS	0.68	0.30	**64**		✓	**46**		✓	67
DURA TECH™ NT COLORS															
CHESTNUT BROWN	0818-0034	0.32	0.83	**31**	**31**		0.35	0.83	**36**			**31**			12
DENALI GREEN	0818-0028	0.25	0.83	**22**	**22**		0.30	0.83	**29**			**22**			11
DESERT BEIGE	0818-0042	0.45	0.83	**49**	**48**		0.51	0.84	**58**		✓	**48**		✓	39
LIGHT STONE	0818-0033	0.55	0.83	**63**	**60**		0.60	0.84	**70**		✓	**60**		✓	53
OLD TOWN GRAY	0818-0039	0.35	0.83	**35**	**35**		0.40	0.84	**43**		✓	**35**		✓	27
RUSTIC RED	0818-0031	0.35	0.83	**35**	**35**		0.40	0.84	**43**		✓	**35**		✓	13
SURF WHITE	0818-0036	0.55	0.83	**63**	**60**		0.63	0.84	**74**		✓	**60**		✓	59
TAHOE BLUE	0818-0027	0.25	0.83	**22**	**22**		0.33	0.84	**33**			**22**			14
WEATHERED COPPER	0818-0035	0.32	0.83	**31**	**31**		0.32	0.83	**32**			**31**			11
WINTER WHITE	0818-0044	0.70	0.83	**84**	**75**		0.73	0.83	**88**	✓	✓	**75**	✓	✓	74
DURA TECH™ 5000 & DURA TECH™ MX COLORS															
COLONIAL RED	0818-0016	0.25	0.83	**22**	**22**		0.34	0.85	**35**			**22**			9
DARK BRONZE	0818-0018	0.25	0.83	**22**	**22**		0.32	0.84	**32**			**22**			8
FOREST GREEN	0818-0012	0.25	0.83	**22**	**22**		0.30	0.84	**29**			**22**			9
LEAF GREEN	0818-0015	0.25	0.83	**22**	**22**		0.30	0.85	**30**			**22**			11
MATTE BLACK	0818-0046	0.25	0.83	**22**	**22**		0.30	0.84	**29**			**22**			5
METALLIC CHAMPAGNE	0818-0038	0.35	0.75	**32**	**32**		0.48	0.84	**54**		✓	**32**		✓	33
METALLIC COPPER	0818-0006	0.35	0.75	**32**	**32**		0.48	0.83	**53**		✓	**32**		✓	29
METALLIC SILVER	0818-0003	0.35	0.75	**32**	**32**		0.57	0.82	**65**		✓	**32**		✓	50
MIDNIGHT BRONZE	0818-0055	0.25	0.83	**22**	**22**		0.28	0.84	**27**			**22**			7
OLD TOWN GRAY	0818-0009	0.35	0.83	**35**	**35**		0.40	0.85	**43**		✓	**35**		✓	27
PARCHMENT	0818-0047	0.45	0.83	**49**	**49**		0.51	0.84	**58**		✓	**49**		✓	40
PEBBLE	0818-0059	0.32	0.83	**31**	**31**		0.43	0.85	**48**		✓	**31**			27
REGAL BLUE	0818-0008	0.25	0.83	**22**	**22**		0.30	0.84	**29**			**22**			10
REGAL WHITE	0818-0049	0.70	0.83	**84**	**79**		0.73	0.84	**88**	✓	✓	**79**	✓	✓	75
SAGE GREEN	0818-0056	0.35	0.83	**35**	**35**		0.38	0.84	**41**		✓	**35**		✓	21
SIERRA TAN	0818-0020	0.45	0.83	**49**	**49**		0.49	0.84	**55**		✓	**49**		✓	34
SILVERSMITH	0818-0058	0.35	0.75	**32**	**32**		0.52	0.82	**58**		✓	**32**		✓	54
SLATE GRAY	0818-0057	0.25	0.83	**22**	**22**		0.32	0.85	**33**			**22**			12
TAHOE BLUE	0818-0007	0.25	0.83	**22**	**22**		0.33	0.84	**33**			**22**			14
TERRA COTTA	0818-0037	0.35	0.83	**35**	**35**		0.39	0.84	**41**		✓	**35**		✓	15
VINTAGE®	1014-0003	0.30	0.70	**22**	**21**		0.30	0.70	**22**			**21**			20
WALNUT	0818-0054	0.32	0.83	**31**	**31**		0.37	0.84	**38**			**31**			18
WEATHERED COPPER	0818-0019	0.32	0.83	**31**	**31**		0.34	0.83	**34**			**31**			11
ZACTIQUE® II	0818-0004	0.35	0.75	**32**	**32**		0.37	0.84	**39**		✓	**32**		✓	22
ZINC GRAY	0818-0010	0.35	0.83	**35**	**35**		0.37	0.85	**39**		✓	**35**		✓	20

[A] - All performance data for Zincalume Plus is based on actual testing (not color families)

ZINCALUME® is a registered trademark of BlueScope LTD

ASC ColorPerf Apr24.xls

All information stated in the product sheet is correct at time of publication and subject to change without notice, check our website for the latest version.
©2026 ASC Profiles LLC All rights reserved. 0926 web

AEP SPAN TECHNICAL BULLETIN #20

Field Cutting Metal Panels

Cutting AEP Span' prefinished panels on a jobsite can create severe performance issues. Improperly cut panels can create corrosion and finish deficiencies that will compromise our Material and Paint Finish Warranties if this cut edge is exposed to weather.

There are specific reasons that factory-produced panels require cutting on a jobsite. Most common roof instances include the need to miter cut a panel end at a valley or hip, at an eave that is not perpendicular to the slope, and at penetrations. Another example is panels that require lengths shorter than can be produced on precut roll forming mills.

METHODS USED TO CUT METAL PANELS:

HAND TOOLS:

- **SHEET METAL SHEARS.** A heavy-duty, long handled pair of metal cutting scissors with short blades.
- **AVIATION SNIPS.** Left hand cuts, green handles; right hand cuts, red handles; straight cuts, yellow handles.

- . The most popular is a portable hinged devise manufactured by Swenson Shear. It is commonly used to field cut corrugated or trapezoidal ribbed panels at right angles to the ribs. Swenson also manufactures a portable field table that will notch-out standing seam panel ribs, and another adjustable table (for step #2) that slits the flat up to a 45° angle.

ELECTRICAL POWER TOOLS:

- **NIBBLERS.** A hand-held oscillating punch-and-die that removes consecutive moon-shaped pieces, progressing forward to make the cut. When using this tool, it is difficult to cut in a straight line, especially up and over standing seam or trapezoidal ribs.
- **POWER SHEARS.** Electrical scissors that cut a straight strip of material out of the panel approximately 1/8" wide and curls up the strip in a pig tail-type configuration. This is a good tool to cut parallel to ribs, but difficult to cut across a panel. It is a good tool to cut the flat pan of a standing seam panel and for cutting a panel parallel to ribs.
- **CIRCULAR SAW BLADES *(not recommended)*** Examples of these blades are found in lumber yards, hardware stores and home improvement stores:
  - **ABRASIVE METAL CUTTING BLADES.** In a circular saw this blade produces extreme noise levels, high velocity spark steams, and leaves a ragged edge similar to a serrated knife blade. A panel cut with this blade requires a scissors-type hand tool to trim back the cut edge ½" if the panel end is to be left exposed to weather.
  - **CARBIDE-TIPPED WOOD/LAMINATE BLADE OR REVERSED COMBINATION BLADE.** This blade is often used just for convenience. It also produces extreme noise, heat, and ragged edge as above.

Final cuts to steel panels should not be done with any heat-generating device. These include circular saw or reciprocating saw i.e. jigsaw or Sawzall™ by Milwaukee. Several well known power tool companies produce saws similar to Sawzall.

Lastly, it is common practice to mark a panel to be field cut with a guideline. Black lead pencils should not be used to indicate cutting lines. The carbon in the pencil will promote corrosion. Felt tip ink markers or pens similar to Sharpie® should be used for marking.

All information stated in the product sheet is correct at time of publication and subject to change without notice, check our website for the latest version.
©2026 ASC Profiles LLC All rights reserved. 0926 web

AEP SPAN TECHNICAL BULLETIN #21

Jobsite Storage & Removal

GUIDELINES FOR JOBSITE STORAGE AND REMOVAL OF PROTECTIVE FILMS

Jobsite storage of panels with PREGIS PolyMask protective films applied: Stored panels should be protected from exposure to moisture, sunlight and precipitation. It is recommended to store panels indoors, for the utmost protection from environmental conditions. If outdoor storage is the only means, it is recommended to store panels elevated under a water-proof tarp and tilted in such a way to not entrap moisture and facilitate drainage.

Best practice techniques for the removal of PREGIS PolyMask protective films from panels: Protective films should be removed gradually beginning at one end peeling back at a 180° degree angle with a smooth even motion. Do not quickly jerk the Protective film from the panel. Inspect panels for any adhesive residue once the protective film is removed. Contact your supervisor immediately if residue is observed. (See Technical Bulletin:"Guidelines for UV Exposed Protective Film" for residue removal techniques)

When removing the film in cold weather conditions it is not suggested to remove the protective films if the panels are frozen. If frozen, bring panels into an indoor environment to return them to a recommended film removal temperature. When removing film from panels, the temperature should be between 40° F (16° C) and 90° F (32° C) following the best protective film removal techniques stated above.

When removing the film in wet weather conditions it is not suggested to remove the protective films if the panels are wet and saturated with moisture. If wet, bring panels into an indoor environment and allow them to dry before removing film following the best practice removal techniques stated above.

In both weather conditions using sunlight to dry and or bring panels to the recommended film removal temperature can create a UV exposed residue condition. (See Technical Bulletin:"Guidelines for UV Exposed Protective Film" for residue removal techniques)

Customer Service Centers
Tacoma, WA
Phone: 800-733-4955
Fax: 253-272-0791

All information stated in the product sheet is correct at time of publication and subject to change without notice, check our website for the latest version.
©2026 ASC Profiles LLC All rights reserved. 0926 web

AEP SPAN TECHNICAL BULLETIN #22

Removal of UV Exposed Protective Film

This bulletin covers a specific condition where a protective film that was not intended for outdoor exposures was not removed immediately before exposure to the elements. Please determine if it is applicable in your situation.

Exposure to UV light and weather elements can result in adhesives to bond and potentially leave residue to the surfaces they were applied to. The film can also degrade to the point it can no longer be peeled off.

Important Notice: Petroleum solvents, cleaners containing abrasives, strong alkaline or strong acidic levels should not be used. Guidelines from the specific substrate, paint or surface coatings manufacturers and best practices to clean the appropriate materials should be followed to ensure performance claims and warranties are protected.

Customer Service Centers
Tacoma, WA
Phone: 800-733-4955
Fax: 253-272-0791

All information stated in the product sheet is correct at time of publication and subject to change without notice, check our website for the latest version.
©2026 ASC Profiles LLC All rights reserved. 0926 web

AEP SPAN TECHNICAL BULLETIN #22

Removal of UV Exposed Protective Film

REMOVAL OF FILM & RESIDUE

As a general rule the film backing will be resistant to the absorption of the GOO GONE PRO- POWER*, Citrus Power Remover or Citrus Based Adhesive Remover *

Remove as much of the film backing as possible, this will allow the GOO GONE PRO- POWER*, Citrus Power Remover or Citrus Based Adhesive Remover * to wick under the film backing.

With the dry substrate out of direct sunlight, saturate the film backing with GOO GONE PRO-POWER* Citrus Power Remover or Citrus Based Adhesive Remover *
Keep the film backing saturated with repeated applications of remover, until the film backing swells and softens. Do not allow the film backing to dry out. The key step is to allow some for the remover to wick under the edges of the film. This can be aided by gently agitating the film edges with a soft bristle brush.

Once film backing has softened, remove film backing by means of scraping with a soft non-abrasive scrapper, being careful not to scratch or damage the substrate. It is common for only the area of the film backing near the films edge or at film fractures to be removable; it may take numerous repeated cycles to remove all the film backing.

When film backing and adhesive residue are completely removed, a general purpose surface cleaner may be used on a clean soft cloth to remove any light residue/haze that may be present on the substrate.

Important note: Panel must be completely dry before applying full strength GOO GONE PRO-POWER*, Citrus Power Remover or Citrus Based Adhesive Remover.

*GOO GONE PRO-POWER or any Citrus Based Adhesive Remover can react with certain substrate surfaces, and should always be tested on a small area before use. Carefully read and follow the manufacturer's precautions and directions for use when using any cleaner. The attached information is provided for general knowledge only; it is not to be considered an exact method for removal of protective films or adhesive residue transfer.

Care should be taken to avoid cleaners from contacting siding, windows, doors and vegetation. Always test cleaning methods in an inconspicuous area before proceeding.

Local environmental guidelines should be followed for disposal, of cleaning agents.

Customer Service Centers
Tacoma, WA
Phone: 800-733-4955
Fax: 253-272-0791

All information stated in the product sheet is correct at time of publication and subject to change without notice, check our website for the latest version.
©2026 ASC Profiles LLC All rights reserved. 0926 web

AEP SPAN TECHNICAL BULLETIN #23

Solar & Your AEP Span Roof

SUMMARY

- AEP Span recommends the use of standing seam metal roofing (Design Span hp® and Skyline® Metal Roofing) with seam clamps (such as S-5! clamps or similar) to attach photovoltaic arrays (solar panels) to metal roofs.
- Alternative methods that use multiple fasteners that penetrate through the roof surface could affect the performance of the roof over time.
- For additional information please contact AEP Span.

OVERVIEW

Installing solar photovoltaic (PV) panels offer several benefits, including lower electricity costs, a reduced carbon footprint, and increased home value. Federal and state incentives can also offset solar installation costs, such as The Inflation Reduction Act, which offers a 30% federal tax credit on solar installations.

Skyline roofing featuring solar panels

Metal roofs are an excellent roofing substrate for solar photovoltaic (PV) panels. The recommended approach for metal roofing is to install PV panels on standing seam roofing, such as Skyline, Skyline hp, and Design Span hp, using solar clamps. Solar clamps attach to the raised ribs of the standing seam profile and are fastened without penetrating the metal. Some solar clamps may also eliminate the need for solar PV racking, reducing the weight of the solar installation on the roof. There are different solar clamp designs available based on the type of standing seam panel used. Note that the seam is different between Skyline® and Design Span hp® and each product will require different solar clamp designs. Skyline uses a nailing flange and snap interlocking seam, whereas Design Span uses a clip and folded panel seam.

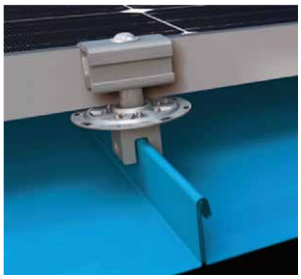

Pictured above are examples of different S-5! Standing Seam Clamps for different panel designs
(Images courtesy of S-5!)

A standing seam roof offers the advantage of concealed fasteners that limit the number of exposed roofing penetrations, extending the lifespan of the roof. By attaching solar panels to the roofing panel seam instead of through multiple penetrations, the solar clamps allow the panels to expand and contract with seasonal temperature variations. Allowing for thermal movement can help avoid aesthetic and performance issues from deformation, including oil canning (aesthetic waviness) and the elongation of exposed attachment holes over time, a potential source of roof leaks.

Design Span hp with solar panels

In addition to the performance and durability benefits, standing seam solar clamps can be installed on new or existing metal roofs. Solar panels are installed after the metal roof is installed and flashed. As the solar array is an accessory to the metal roofing system, it is imperative that the frequency of attachment points to the roof, and the roof to the building, be checked to meet any performance or building code standards. It is the responsibility of the installer to verify this information or seek assistance from a qualified design professional if necessary.

Continued on next page...

All information stated in the product sheet is correct at time of publication and subject to change without notice, check our website for the latest version.
©2026 ASC Profiles LLC All rights reserved. 0926 web

Solar & Your AEP Span Roof

Design Span hp with solar panels

For additional information please submit your question via Ask AEP Span
https://www.aepspan.com/ask-aep-span/

Other Solar Installation Considerations

Avoid Unintentional Corrosion – In solar installations, premature corrosion can occur where exposed copper wire from the panels is in contact with the metal roof. This includes direct metal to metal contact, or indirect through rain or condensation run off. This issue is most prevalent in corrosive environments, such as marine settings but can occur in other settings. If the use of copper cannot be avoided, it is recommended to use insulated copper or a protective coating over the copper to prevent contact. Any electrical terminals that use exposed copper should also be sealed. This includes but is not limited to grounding wire for PV arrays and lightning protection.

All information stated in the product sheet is correct at time of publication and subject to change without notice, check our website for the latest version.
©2026 ASC Profiles LLC All rights reserved. 0926 web

AEP SPAN TECHNICAL BULLETIN #35

PRESTIGE SERIES CLIP Revision 2.0 8118111

24ga PS-12 Panel at lOOpsftest point (138psf max obtained)

A clip has been added to the Prestige Series (PS-12) offering to improve panel performance. The clip is required for use in most applications to meet typical wind design loads.

FEATURES AND BENEFITS:

- Durable 16ga, G90 galvanized steel construction to resist high wind loads.
- Low profile - works with all prestige panel profiles, and in both horizontal and vertical applications.
- Can be used with all common Prestige Series installations over studs/girts, plywood and other solid substrates.
- Features spring tab on one end to prevent male panel leg from backing out of adjoining panel; hold down clamp on opposite end to keep female panel leg from springing open during uplift loads.
- Majority of projects will work at wide clip spacings -average design loads of 36psf for 24ga and 46psf for 22ga at 7.5ft spans (refer to test report for specific values).
- Clip design accepts #10 pan head fasteners up to #14 lap screws.

Fig. 1 Clip Details

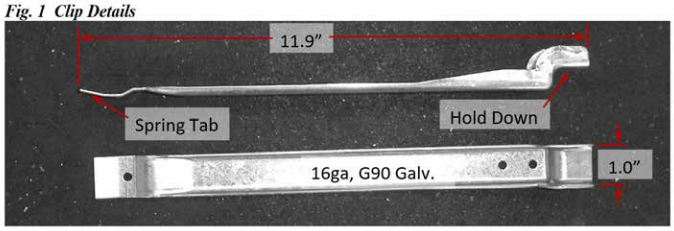

- Locate clip mounting hole over fastener locating groove on adjoining panel (See Fig. 2). Drive fastener through clip and panel, and into substrate. Ensure that clip is perpendicular to panel edge. There is a centerline indicator stamped above and below the mounting hole to assist with perpendicular clip alignment (clip design allows for positioning of clip to be approximately 90° ± 3°). In vertical panel installations, or instances where second hand is not available to hold clip, the clip can be rotated into the perpendicular position after the fastener is partially driven.
- Once clip has been positioned perpendicular to adjoining panel, fasten hold down end of clip with remaining fastener(s).

Fig. 2 Clip Installation

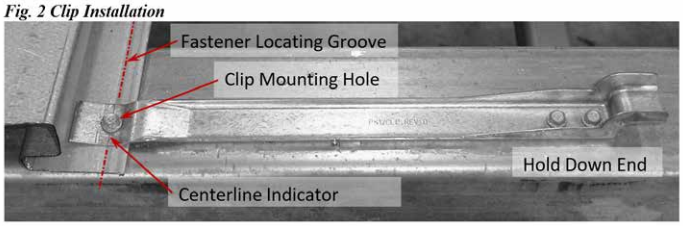

- Engage next Prestige Series panel by lying next to previously installed panel as shown in Fig. 3 and slide together until completely engaged. An audible "click" will be heard when panel is fully locked behind clip. Because of the clip's low-profile design, this engagement is possible with panel ends contained within C-metal trims.

Fig. 3 Engagement of Panel

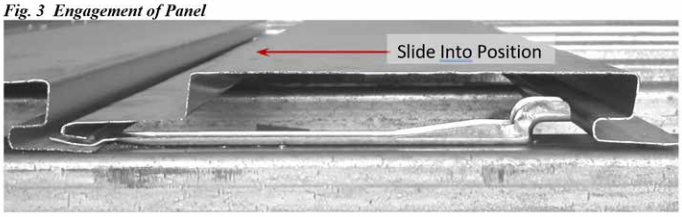

Fig. 4 Installed panel

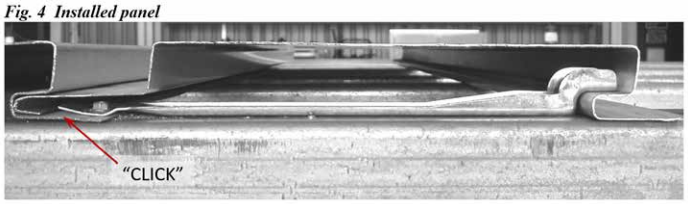

NOTES:

- PS-12 clip is required for use in most jobs that require engineering. 22 and 24ga panels without clips are only rated for design loads of approximately 15 and 10psf respectively (refer to test reports for specific values).
- Clip is currently only available for use in 22 and 24ga applications. It has not been evaluated for use with 18 & 20ga panels (increased effort required to engage 18 & 20ga panels with this clip).
- Shorter clip spacings will increase effort to engage panels

– use the widest clip spacing that will still meet wind load requirements.

Submitted by: bmg
Date: 6/10/2009, Revised 8/18/11

All information stated in the product sheet is correct at time of publication and subject to change without notice, check our website for the latest version.
©2026 ASC Profiles LLC All rights reserved. 0926 web

AEP SPAN TECHNICAL BULLETIN #36

STANDING SEAM ROOF-TO-WALL TRANSITIONS

INTRODUCTION

A standing seam roof-to-wall transition is a seamless roofing to wall cladding transition utilizing a standing seam roofing product. It is quickly becoming a favored design element and utilized by many design professionals due to its clean aesthetic lines, apparent seamlessness and continuity over the building envelope.

Despite this transition looking like a simple installation, it is quite difficult to complete correctly. There are many elements to this system that can be mis-detailed, easily ignored or mis-installed that will cause the entire system to leak, oil can or twist and turn due to thermal movement. In addition to correct detailing, some major concerns in specifying this system are thermal cycling, moisture limitations and installation-related issues.

Thermal Design Considerations

Thermal movement is a major design concern of any metal system. A metal panel, be it installed on a wall, roof or soffit, must be able to expand and contract along with the ambient temperatures that it is exposed to. A thermally locked metal panel will attempt to thermally cycle within its confines, which in turn, may cause premature fastener backout, oil canning (pictured below) or system failure. In the roof-to-wall transition, the eave or edge where the panel folds from the roof to the wall becomes a point of fixation. This transitional point-of-fixation will not allow the panel to thermally expand and contract along its typical axis and it is unable to be cut or altered. This being the case, the panel must be allowed to expand up-slope and a floating ridge detail must be used. **See Figure 1**.

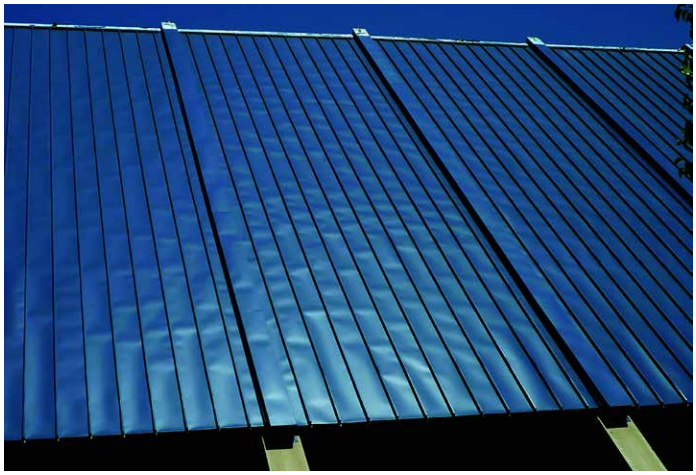

Keep in mind that because the panel must expand against gravity, there are certain restrictions that come in to play with panel length and slope. Additionally, a thicker gauge may be used to extend the limitations of these variables. Since steel can thermally expand 1/16-inch to 1/8-inch per 10 feet of panel run, the expanding ridge condition must also account for the appropriate amount of thermal movement with an appropriately sized ridge cap. Similarly, on the wall side of the panel run, the panel must be allowed to expand down the outer side of the wall towards the foundation.

Kneecap Installation Over the Cut Ribs

After the panel is installed on the roof, the panel legs are cut and the panel is allowed to fold down the side of the structure under its own weight where it now becomes wall cladding. There are now cuts in the panel ribs resulting in a compromised panel. The openings left by the cut ribs must be covered. This is done with kneecaps. Kneecaps are essentially L-brackets that are installed to cover the panel rib and act as the primary source of waterproofing at the roof-to- wall transition and maintain a constant seam appearance. The kneecaps must be manufactured out of the same material as the metal panel to maintain a congruent warranty and paint color. Additionally, this will ensure that from a distance the transition is as seamless as possible. **See Figure 2.**

Moisture Design Considerations

Moisture issues often manifest in the kneecap detail. A seamless metal panel itself is inherently waterproof, but the kneecap is a secondary covering relying on pop-rivets and sealant. Kneecaps are not as effective in a snowy environment because of the ice dam effect and thermocycling. Moisture present in the kneecap detail can freeze and thaw within the kneecap and over time cause the joint to rupture. Additionally, snow sheer loads are a concern as the snow falls off the roof can strip the knee caps off in one fell swoop. Roof-to-wall transitions must be used with extreme caution in snowy environments. **See Figure 3.**

All information stated in the product sheet is correct at time of publication and subject to change without notice, check our website for the latest version.
©2026 ASC Profiles LLC All rights reserved. 0926 web

STANDING SEAM ROOF-TO-WALL TRANSITIONS

Installation Considerations

Installation is critical to any system and this detail is no exception. A major issue is how to support the un-installed portion of the panel as it is run off the roof prior to the ribs being cut and folding down the wall. On short panel runs, this is not an issue but on anything over one story, the installer may want to utilize a scissor lift to support the panel end prior to cutting the ribs and then slowly walk the lift down after the ribs are cut, ensuring that the panel bends straight.

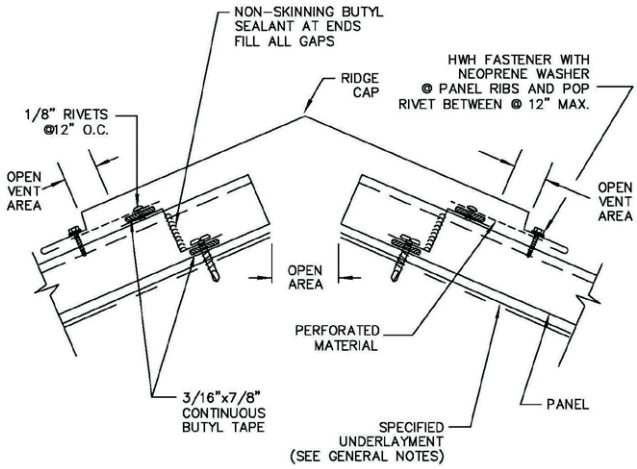

Figure 1.

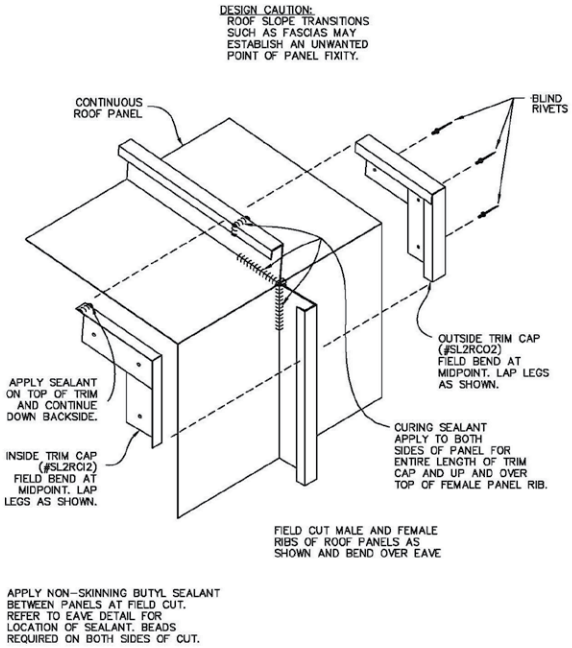

Figure 2.

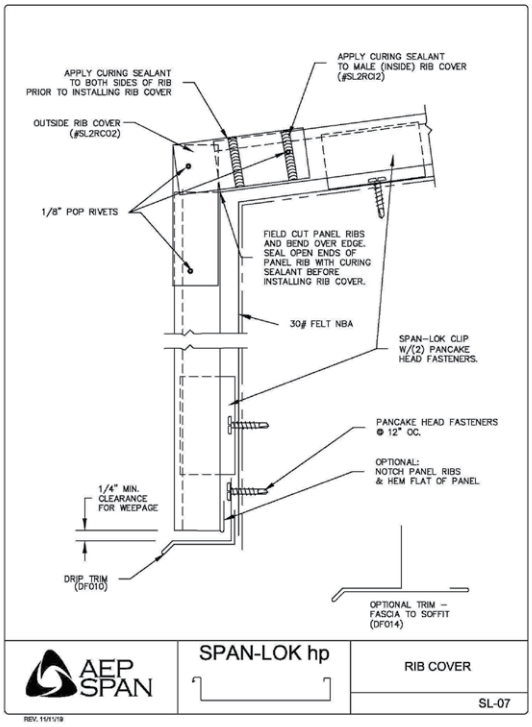

Figure 3.

All information stated in the product sheet is correct at time of publication and subject to change without notice, check our website for the latest version.
©2026 ASC Profiles LLC All rights reserved. 0926 web

AEP SPAN TECHNICAL BULLETIN #37

SWARF STAINING ON STEEL ROOFS & WALL PRODUCTS

Introduction
Swarf, also known as metal filings or rust spotting, refers to steel debris created from cutting or piercing operations when using friction saws, abrasive discs, drills etc., on steel roofing and siding products. This debris in addition to other discarded steel objects such as rivet shanks, nails, screws and nuts, which may come in contact with coated products (i.e. pre-painted steel) are the subject of this bulletin.

Swarf particles, if left on the surface, will corrode and cause rust stains which will detract from the finished appearance of a project. These stains are often mistaken for early deterioration of the roofing or siding itself.

Fresh swarf stains are typically small red-brown colored areas with a central dark spot (remnants of the steel particle). The surface will feel rough, and the particle may be dislodged with a fingernail. An older swarf stain will have a smooth, redbrown stain, the original steel particle having corroded away. Prevention of such staining is the responsibility of the installer and it is strongly suggested that the recommendations contained in this bulletin be followed.

Metal debris will come in contact with coated steel sheet products in three ways:

- Loose particles left after cutting, drilling and riveting operations.
- Hot metal filings from disc cutting or drilling operations which may adhere to the finished surface.
- Loose particles which may be ground in underfoot or become embedded in the surface film of pre-painted products under pressure from adjacent equipment or materials.

Prevention

Cutting:
Use of a cold cutting saw with an appropriate tungsten blade is the best way to cut sheets on site. This method generates larger, cooler particles than abrasive discs. Where possible, cutting should be minimized by using factory supplied cut-to-length sheets. Sheets cut on site should, where practical, be cut on the ground, with the exterior color finish of pre-painted sheet facing down. Care should be taken to ensure hot filings do not come into contact with nearby pre-paint steel sheets. Do not cut over the top of other coated products, where debris may fall onto other sheets. Where cutting must be carried out near sheets already installed, the area around the cut must be covered and the stream of hot particles directed away from completed work. Field cut edges should be concealed under ridge caps or gable flashings whenever possible. **See AEP Span Technical Bulletin #20 Field Cutting Metal Panels for additional details.**

Drilling:
The area around the hole should be covered to shield the product from hot metal filings. Avoid pre-drilling fastener holes while panels are stacked or bundled. If pre-drilling is necessary carefully clean each panel immediately.

Installation:
Smooth soled shoes should be worn when working on a roof; avoid the ribbed type which will carry metal filings and other objects.

Clean Up:
Metal debris/filings should be swept or hosed from the job progressively and certainly at the end of each day. This action will remove loose particles. Maximum care should be taken when attempting to detach filings which have become stuck; this can be done, but no action which is likely to remove paint or metal coatings should be attempted. Any damage to these coatings will lead to reduced life of the material.

When sweeping or hosing into a gutter, clean out the gutter before leaving the job to prevent premature corrosion. On completion of the job give a final wash or sweep down. For critical applications, inspection of the job should be made after two weeks when rain or condensation will have caused any remaining filings or debris to rust and will highlight affected areas.

Note: Many staining problems arise not from installers, but from other contractors working in the vicinity. Architects and builders need to be aware of this possibility and warn contractors accordingly.

Effect on Performance:
The effect of staining itself on AEP Span's prefinished products is generally aesthetic and may not be detrimental to the performance of the product. The product life will be severely affected where attached metal particles have penetrated the pre-painted film and are in contact with the protective metallic coating, although this only occurs in severe cases. This is because on pre-painted surfaces red oxides of iron are normally inert substances and do not attack the finish; the stain is merely absorbed by the finish. Red oxides of iron are insoluble in water and the stain will take considerable time to weather away.

On metallic coatings, concentrated corrosion can occur over a small area as the zinc in the coating sacrifices itself to prevent oxidation of both the debris and, if allowed to continue, exposed areas of the steel base.

Repair of ZINCALUME Steel Sheet:
Brush the surface with a stiff bristle (not metallic wire) brush to dislodge particles which must then be completely removed. Wire brushing will mar the appearance of the sheet if brushing is not followed by painting. If the coating is severely damaged by corrosion, the area should be painted. Please contact AEP Span to discuss the correct coating to repair the damaged area.

Customer Service Centers
Tacoma, WA
Phone: 800-733-4955
Fax: 253-272-0791

All information stated in the product sheet is correct at time of publication and subject to change without notice, check our website for the latest version.
©2026 ASC Profiles LLC All rights reserved. 0926 web

SWARF STAINING ON STEEL ROOFS & WALL PRODUCTS

Repair of ZINCALUME Steel Sheet:

Mild Staining:
A household cream cleanser, used according to directions, will remove most mild staining from metal debris (one cup of mild, common detergent which contain less than 0.5% phosphate, dissolved in warm water are usually effective). Avoid the use of aggressive cleaners such as TSP.

Severe Staining:

- Clean the surface by washing with a non-ionic industrial or household detergent and water in proportions as recommended by the detergent manufacturer. Wash well with clean water.
- Remove the corrosion product by using a stiff nylon brush and washing off completely. More heavily affected areas may need a light rub with a Scotch-Brite guard pad (not steel wool).
- Abrasive papers should only be used if repainting is to be carried out. Great care must be taken not to cause damage to the paint film.
- Hose down the affected area completely after treatment.
- This treatment will normally leave only very mild stains.

Very Severe or Extensive Staining:
In these cases, if aesthetics is important, either replacement or field painting may be the most appropriate option. Field applied paints will weather faster than factory applied, therefore the entire visible area should be repainted.

Note: The above repair actions will not fully restore the product to its original state. It is critical to ensure that swarf is avoided.

Heavy swarf staining on pre-painted steel.

Moderate swarf staining on ZINCALUME Plus.

All information stated in the product sheet is correct at time of publication and subject to change without notice, check our website for the latest version.
©2026 ASC Profiles LLC All rights reserved. 0926 web

AEP SPAN TECHNICAL BULLETIN #38

STORAGE OF PERFORATED STEEL

Perforated material denotes panels or flat sheet material that is punched with a series of holes or slots. Perforation patterns change the way light, air, and sound are diffused. Perforated patterns are differentiated based on the percentage of open area and AEP Span offers several perforated patterns to suit a range of screen wall, partition and enclosure needs. During the perforating process, a solid layer of peel coat (strippable film) is applied to minimize abrasion and scratching damage to the painted surface. When panels are applied to the structure, the peel coat is removed from the panel surface during the installation process (**See AEP Span Technical Bulletin #14 and #15 for peel coat best practices)**.

Due to the number of punched holes, perforated steel material will have many exposed cut edges that can contribute to premature corrosion or rust run off during storage or installation. Corrosion or paint failure as a result of perforation is not covered under warranty. For some exterior applications, aluminum may be a more suitable substrate than steel. Always review your proposed perforated design with an AEP Span technical representative for suitability prior to project commencement.

Storage of Steel Perforated Products

Perforated products should not be stored onsite in bundles for any longer than 14 days prior to installation, unless stored indoors in a semi or fully climate-controlled structure. These bundles should be stored off the ground, ideally on racks or on dunnage. Once the panels are installed, they are no longer nested in bundles, avoiding constant moisture or trapped moisture.

If stored outside for extended periods prior to installation, bundles of panels are exposed to moisture infiltration between the layers of panels. Accelerated corrosion from storage is known as wet stack storage corrosion and also occurs on standard, non-perforated products (**See AEP Span Technical Bulletin #9 for additional details**). The addition of the peel coat on each sheet can trap added moisture between the panel layers, further accelerating wet stack corrosion. Open perforation points on top of a strippable film allow moisture to be trapped in direct contact with the exposed base steel edge. This results in accelerated premature corrosion and rust staining.

Failure to follow this guidance may result in moderate to significant rust staining as depicted below. This staining may be permanent or difficult to remove.

An example of wet stack storage corrosion on a perforated panel

Customer Service Centers
Tacoma, WA
Phone: 800-733-4955
Fax: 253-272-0791

All information stated in the product sheet is correct at time of publication and subject to change without notice, check our website for the latest version.
©2026 ASC Profiles LLC All rights reserved. 0926 web

AEP SPAN TECHNICAL BULLETIN #39

NATURAL MATTE® PVDF INSTALLATION

Finish Overview:

The Natural Matte® PVDF is an ultra-low gloss polyvinylidene fluoride (PVDF) paint system. Please see the guidance below on the recommended strippable film and care and handling guidance.

Installation and Handling:

Apply the appropriate strippable film to exposed metal surface. Strippable film should remain on the metal during transportation, manufacture, and installation.

Handle the product with care to avoid damage or marring. Avoid dragging the exposed painted surface across other surfaces. Always handle the painted surface with clean, dry, cut-resistant gloves.

Avoid carrying unsecured stacks or bundles of sheets or panels, as this may result in metal-to-metal abrasion.

Ensure coils, sheets, or formed panels are secured and packaged appropriately during transportation.

Avoid walking on the painted surface where possible. Minimize foot traffic by establishing walkways and traffic lanes on the roof surface. Ensure those walking on the roof area use clean, non-marking, soft-soled footwear.

Avoid cutting or trimming roof panels directly over the painted metal roof surface. Small metal filings may get lodged in footwear or trapped on the painted surface leading to unintentional scratching.

Check machine settings and clearances to ensure they're within factory spec to avoid excessive machine marring.

Be aware of the sharp metal edges of trim pieces and the potential for metal-to-metal abrasion during installation. Tips to avoid damage include ensuring the trim is supported appropriately during fastening.

Use appropriate metal-specific snips, shears, and drill bits, to ensure accurate trimming and fastener penetration.

Minimize field storage of Natural Matte and store material in a dry, well-ventilated area and away from traffic.

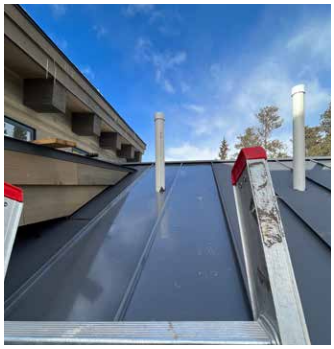

Strippable Film:

The recommended film for Natural Matte PVDF is Novacel 4334.

Other strippable films may fail to provide sufficient adhesion, resulting in issues during product handling, transport, or installation.

The strippable film should not remain on the painted metal surface for more than 60 days.

Extreme environmental conditions, such as severe temperature changes or extreme heat or cold, may impact strippable film adhesion.

Contact:

For inquiries or assistance identifying a suitable provider of strippable film, please contact us at (800) 733-4955, or submit a request via Ask AEP Span.

Customer Service Centers
Tacoma, WA
Phone: 800-733-4955
Fax: 253-272-0791

For most current versions of literature please visit **www.aepspan.com**

All information stated in the product sheet is correct at time of publication and subject to change without notice, check our website for the latest version.
©2026 ASC Profiles LLC All rights reserved. 0926 web

AEP SPAN TECHNICAL BULLETIN #40

NATURAL MATTE® PVDF TOUCH-UP PAINT

Shale
PPG Paint Code
BN0A102B

Carbon
PPG Paint Code
BN0B102B

Overview:
Custom matched touch-up paint for the two Natural Matte® PVDF colors is available through Nanochem Technologies. The touch-up paint features Nanochem's Air Dry System (ADS).

AEP Span does not order or stock touch-up paint and it is the responsibility of interested parties to obtain touch up paint supplies directly from Nanaochem.

Vendor Contact Information:
Nanochem Technologies
1203 Kent Street
Elkhart, IN 46514
(574) 970-2436
www.nanochemtechnologies.com

Caution on Use:
Apply touch-up paint sparingly and only to fine scratches and marks. Always apply this paint per the recommendations of the touch-up paint manufacturer. While touch-up paint may reduce the visibility of light scratches, a direct color and texture match cannot be guaranteed. The variance in application processes and paint technology prevent a direct finish match. Touch-up paint will not offer the same color fade resistance or long-term durability as the factory-applied coating. For major scratches and marring, material replacement will be required.

Additional Inquires:
For additional product inquires on Natural Matte® PVDF please contact (800) 733-4955.

All information stated in the product sheet is correct at time of publication and subject to change without notice, check our website for the latest version.
©2026 ASC Profiles LLC All rights reserved. 0926 web

800-733-4955
aepspan.com

All information stated in the catalog is correct at time of printing and subject to change without notice.
©2026 ASC Profiles LLC. All rights reserved. Natural Matte® is a registered trademark of Steelscape, Inc. ZINCALUME® is a registered trademark of BlueScope Steel Ltd. 0426 web