Span-Lok™ *hp*, Span-Lok™, & SpanSeam™

Installation Guide

Table of Contents

Section	Page
Notes to Designer/User	2-3
Span-Lok™ and SpanSeam™ Panel Profiles	4
Clip Info	5-6
Panel Lap – Fixed	7
Panel Lap – Floating	8
Eave – Fixed	9
Eave – Floating	10
Eave with Gutter Floating	11
Rib Cover	12
Gable	13
Rake Wall	14
Head Wall – Fixed	15
Head Wall – Floating	16
High Eave – Fixed	17
High Eave – Floating	18
Ridge/Hip – Fixed	19
Ridge/Hip – Floating	20
High-Low Slope Transition	21
Low-High Slope Transition	22
Valley – Fixed	23
Valley – Floating	24
Panel Package Handling	25
Panel Layout	26
Panel Seamers	27
Eave Hem	28
Clip & Thermal Spacer	29
Panel Lap	30
Rib Cover	31-32
Curved Span-Lok	33
Appendix A - *Drag Load Table*	34
Appendix B - *Fastener Schedule/Drag Loads*	35

Notes to the Designer/User

The details contained in this packet are intended to be a design aid and do not depict all situations. Modifications are the responsibility of the designer/user and should take into account climate conditions such as wind and snow, governing code requirements, and the actual usage and maintenance of the structure. AEP Span makes no representations or warranties regarding modifications from the recommendations contained in this installation guide, situations not depicted in this guide or the any services/work performed by the designer/user of this guide. As with all architectural and design services, the user of this installation guide must use his/her professional judgement and expertise when specifying and installing building products.

Where possible, roof and flashings should be lapped away from prevailing winds. Certain flashings should be supported if it is likely that a ladder will be used against them or if foot traffic is anticipated. Check with AEP Span any time you intend to specify a prefinished flashing in a gauge different than the panels. Our standard gauge for all of the products in this booklet is 24 gauge and the standard finish is Kynar 500™/ Hylar 5000™. It is good practice to specify that all flashings be of the same material (gauge, color, finish) as the roof panels to ensure long-term durability. Field-painted flashings rarely equal the durability and color fastness of factory baked-on paint systems. Where possible we have minimized the use of exposed fasteners and have hemmed the edges of flashings to strengthen them and to minimize the exposure of cut edges.

Substrates - The Span-Lok™ and SpanSeam™ roofing panels can be used over spaced support members or over solid substrates.

Slope Requirements - The panels in this booklet should be used on slopes of 1/4":12 or greater.

Condensation, Insulation, & Ventilation - It is the designer's responsibility to determine the need and composition of condensation control materials including insulation and vapor retarders, as well as ventilation requirements. Metal roofing is susceptible to condensation and its control should be carefully considered. Applications over rigid insulation may require solid blocking/framing for installation of perimeter flashings and fasteners (ref. drag load tables).

Underlayments - Prior to panel installation a minimum of 30 lb. felt (or two layers of 15 lb. felt) should be installed per the felt manufacturer's recommendations. The underlayment should be lapped with all flashings in a shingle-like manner. When a premium underlayment is required, a self-adhering, cold-applied rubberized asphalt membrane should be specified.

"Pinning" Requirements - The panels must be "pinned" at one end only to resist the "drag" load caused by the weight of the panel, live loads, and snow loads. The intensity of the drag load is a function of slope, the loads involved, and the length of the panels. Appendix "A" gives the drag loads for various slopes and loading conditions, and Appendix "B" shows the fasteners required to resist the drag load.

Expansion & Contraction - Both the panels and the flashings must allow for expansion and contraction of the materials, especially where long lengths are used. The overlap between the hidden cleat and the turned-under end of the panel at the eave may need to be increased to accommodate thermal movement where long panels (i.e. 30ft.+) are used.

Valleys - Valley dimensions must be the proper width to account for slope, snow, ice, and rain conditions. Valleys should receive a premium

underlayment since they are susceptible to water buildup. If valleys are not kept free of debris and water does back up, intrusion may occur under the panels. An underlayment such as a self-adhering cold-applied rubberized asphalt membrane should be put down first, extending 3 ft. up from the center of the valley on each side. The 30 lb. felt should then overlap this underlayment.

Snow Design - Span-Lok™ and SpanSeam™ are suited for heavy snow loads. If possible, valleys, gutters, roof elevation changes and penetrations should be minimized or eliminated in snow areas. Roof penetrations should be located as close to the ridge or peak of the roof as possible to minimize accumulations of ice and snow and the effects of thermal movement of the roof panels. Premium membrane underlayments should be used. Valleys in snow areas require special consideration due to the accumulation of snow and ice from tributary roof areas.

Oil Canning - Flat metal surfaces will display waviness commonly referred to as 'oil canning'. This is caused by steel mill tolerances, variations in the substrate and roofing underlayments. Oil canning is a characteristic, not a defect, of panels manufactured from light-gauge metal. Panels are factory "corrective-levelled" to minimize oil canning. Oil canning is not a cause for panel rejection. Additional information is available upon request.

References - The Sheet Metal and Air Conditioning Contractors' National Association Inc. (SMACNA) manual is an excellent reference for sheet metal contractors. Its guidelines for underlayments, gutter and downspout size requirements, and expansion/contraction of metals and flashing joints should be followed.

Technical Assistance - Call your AEP Span Sales Representative for additional information on any of these subjects.

Definitions -
Sealant = Gunnable-grade non skinning/non curing butyl rubber
Mastic = Butyl mastic tape

Hem: A 180º bend that is closed (or as closed as the formability of the metal will allow) to provide a uniform, attractive edge.

Hook: (also called an "open hem") A 180º bend on a piece of sheet metal that is left open to allow insertion of another piece of sheet metal. For example, the hook shown is used to hold the trim piece to a cleat below the trim.

NOTE: References to 'Span-Lok' in this installation guide also apply to 'Span-Lok hp' unless otherwise noted.

Onsite Services

Curved Span-Lok

16" wide x 2" tall Span-Lok panels (not Span-Lok HP or SpanSeam) are available Factory or Jobsite curved. Page 33 provides Rake and Rake Wall details that are unique to the curved Span-Lok installation.

Inquire with your AEP Span sales representative for additional details. There is also an AEP Span Curved Span-Lok Customer Guidelines document available that explains the requirements and expectations in greater detail.

Panel Profiles

Span-Lok hp

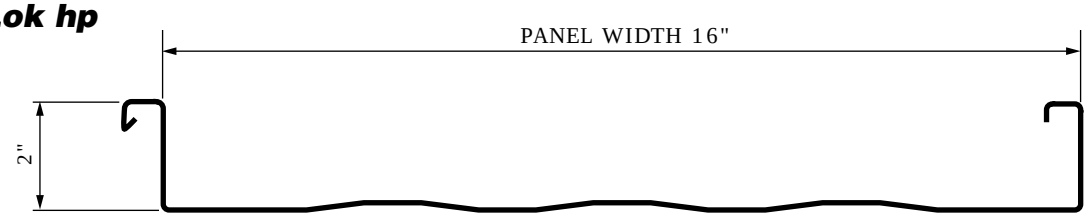

Span-Lok hp - Striated (standard)
also available with pencil ribs (2) or flat pan

Curved Span-Lok & Spanseam

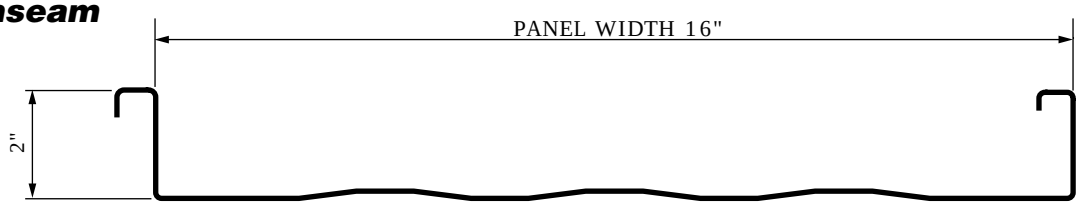

Span-Lok/Spanseam - Striated (standard)

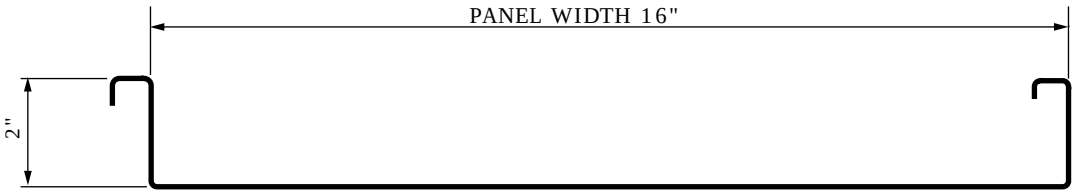

Span-Lok - Flat Pan

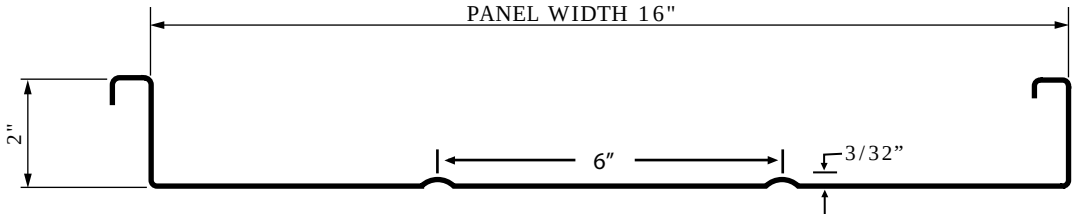

Span-Lok - Pencil Ribbed

Panel leg views - after seaming

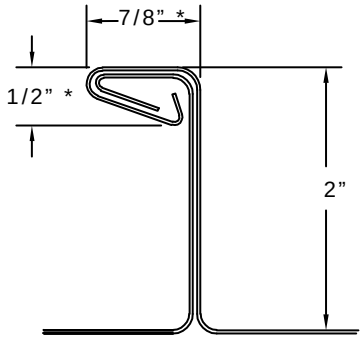

***Span-Lok* hp**

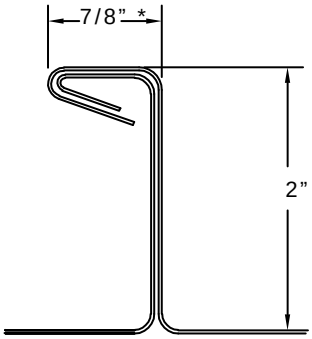

Curved Span-Lok

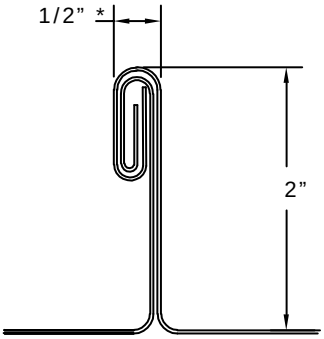

SpanSeam

* Note: Dimensions Approximate

Clip Info

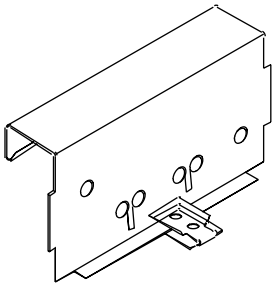

Standard Clip

Available in 2 1/2″ and 3″heights

Use: Raises panel 1/2″ or 1″ above support
- 2-1/2″ and 3″ clip with 2″ panel
- Use Standard clips when installing panels over fiberglass insulation with or without thermal blocks
- Floating clip allows for thermal movement

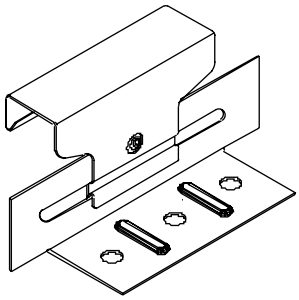

Low Profile Clip

Available in 2″ heights

Use: Holds panel close to substrate
- 2″ clip with 2″ panel
- Use low clip over wood deck, rigid insulation (with bearing plate) or open framing without insulation.
- Minimal 3/16″ gap provides just enough clearance above fasteners
- Floating clip allows for thermal movement

Compressible Insulation Combinations with Standard Clip
- 2-1/2″ clip - Compress maximum of 3″ of fiberglass insulation.
- 3″ clip - Compress maximum of 3″ of fiberglass insulation plus 1/2″ Thermal Block
- 3″ clip - Compress maximum of 6″ of fiberglass insulation without Thermal Block

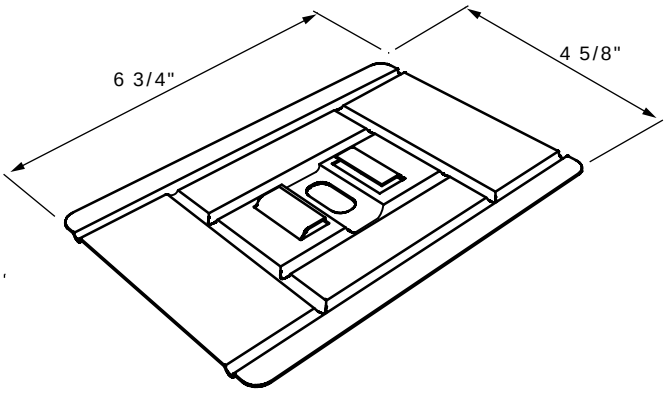

Bearing Plate for Std. Clip

Use: Installing panel over solid substrate.

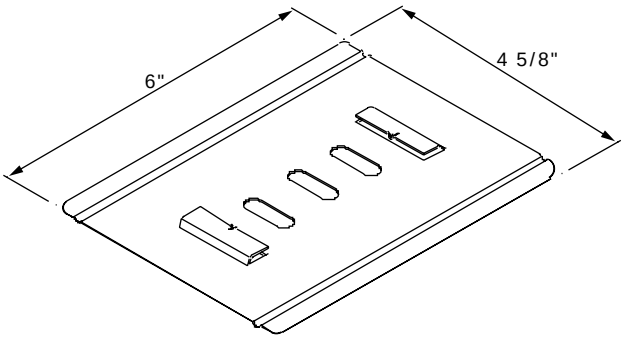

Bearing Plate for Low Clip

Use: Installing panel over rigid insulation.

Clip Info (cont.)

Span-Lok™ Clip Detail

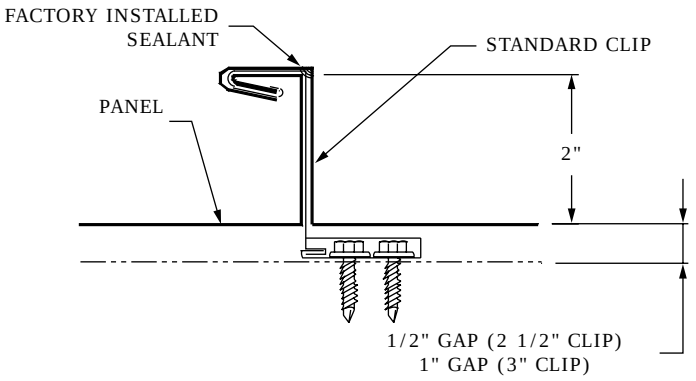

Seamed Std. Clip

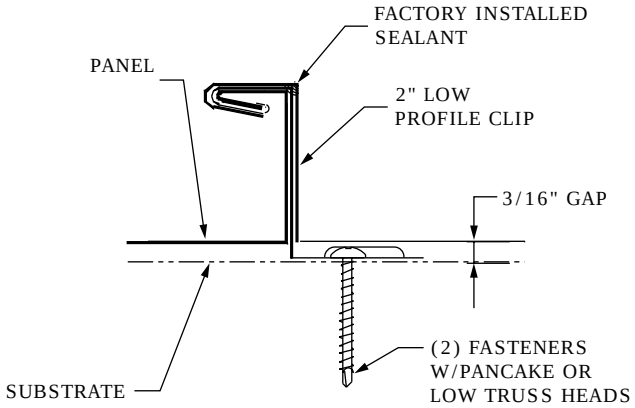

Seamed Low Clip

SpanSeam™ Clip Detail

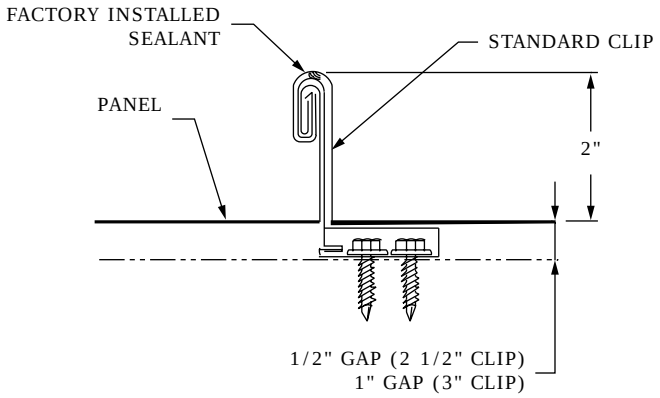

Seamed Std. Clip

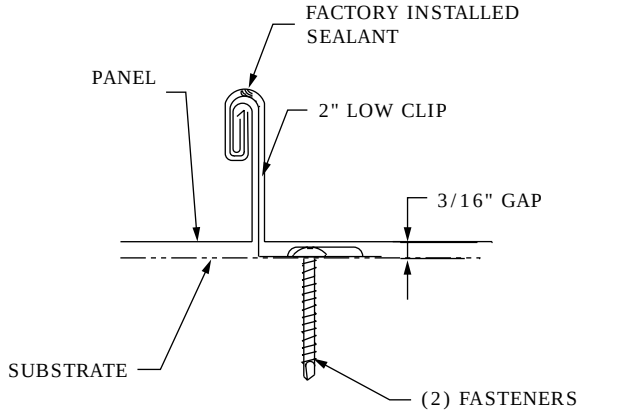

Seamed Low Clip

Installation Note: Panels must be hand crimped to 90º at all clips before mechanically seaming panels. Use hand crimping tool designed for Span-Lok™ panel.

Panel Lap – Fixed

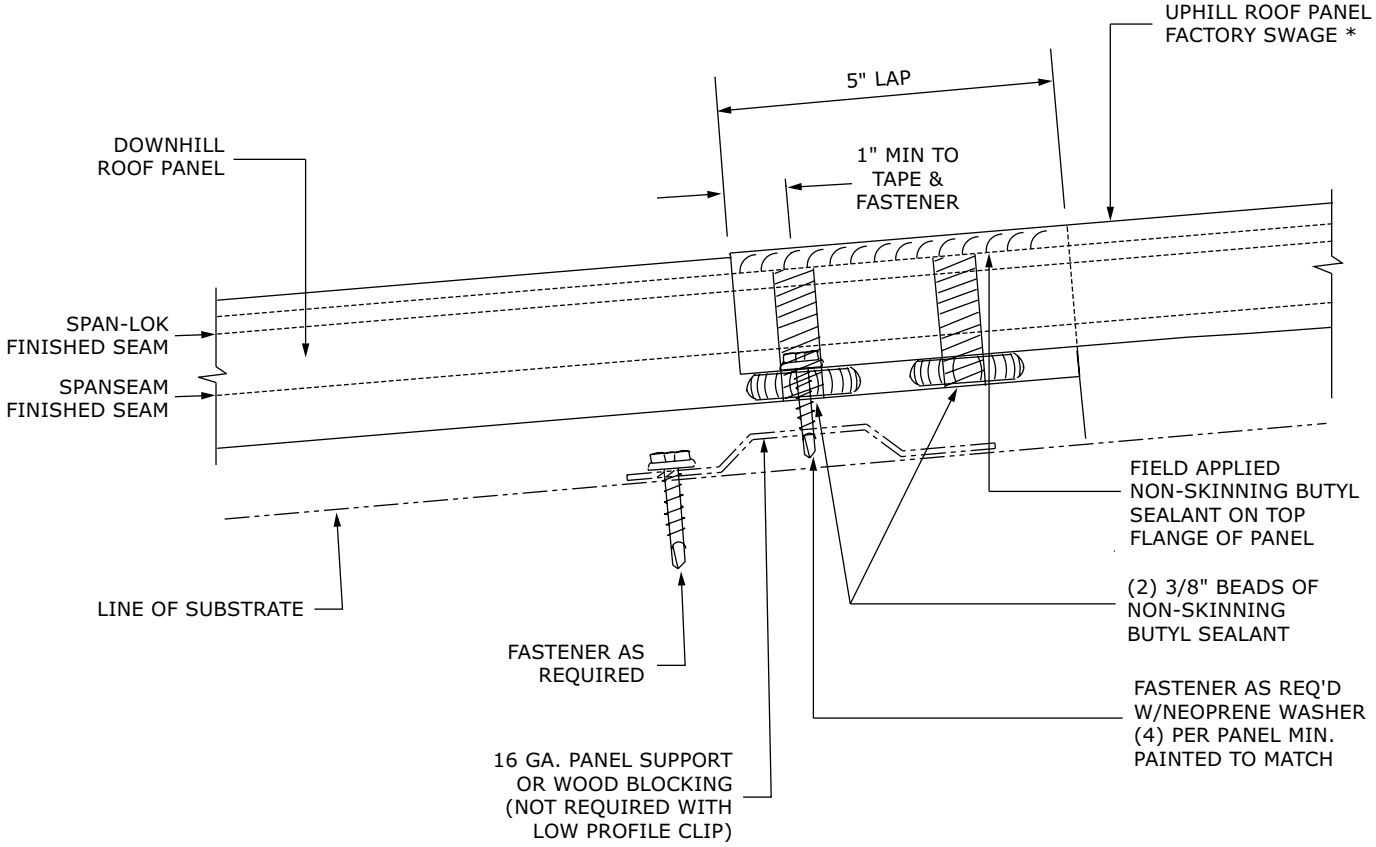

* SWAGE TOP PANEL ONLY
PANELS MUST BE INSTALLED LEFT TO RIGHT ONLY

Panel Lap – Floating

(also refer to page 30)

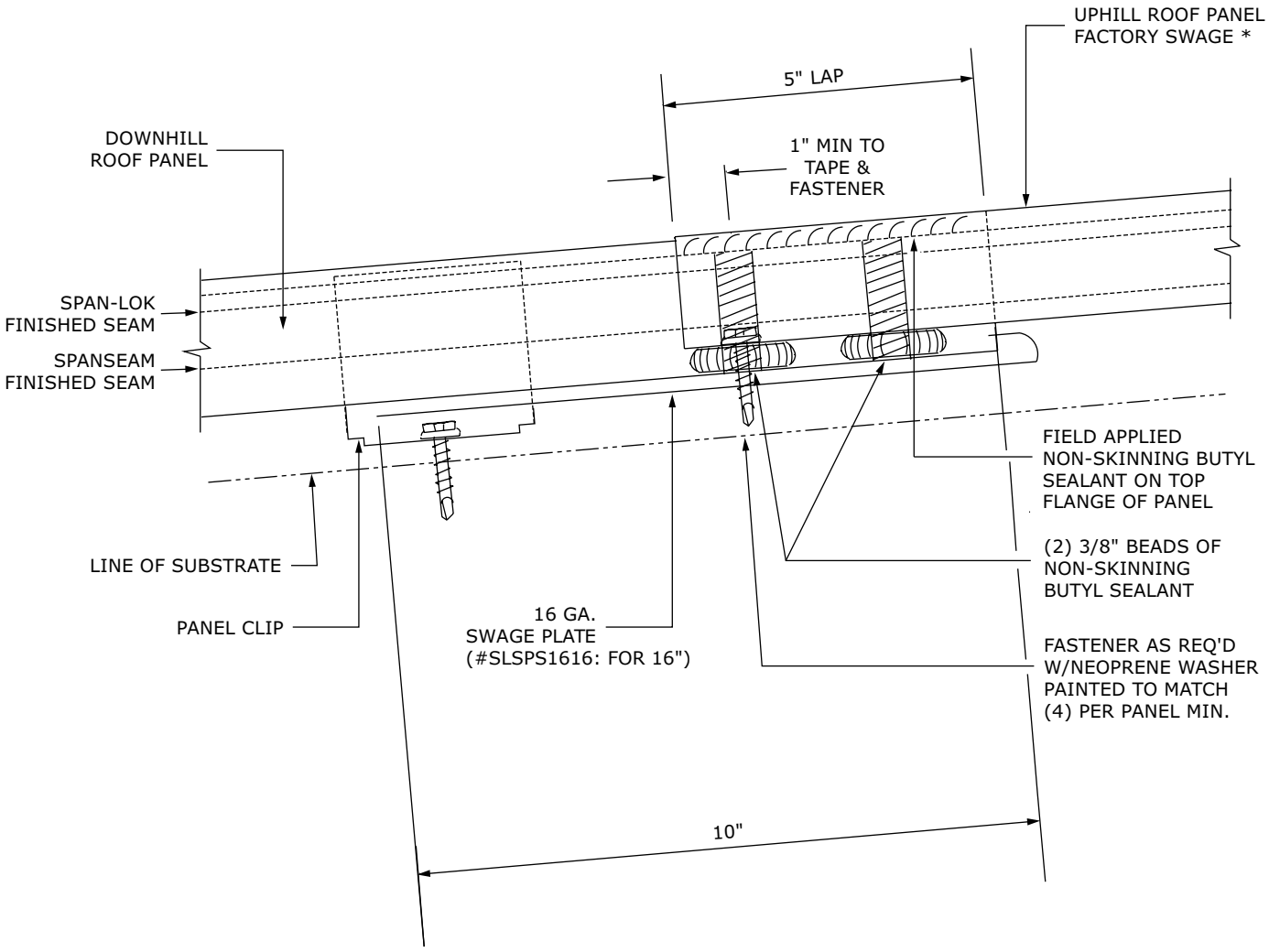

* SWAGE TOP PANEL ONLY
PANELS MUST BE INSTALLED LEFT TO RIGHT ONLY

Eave – Fixed

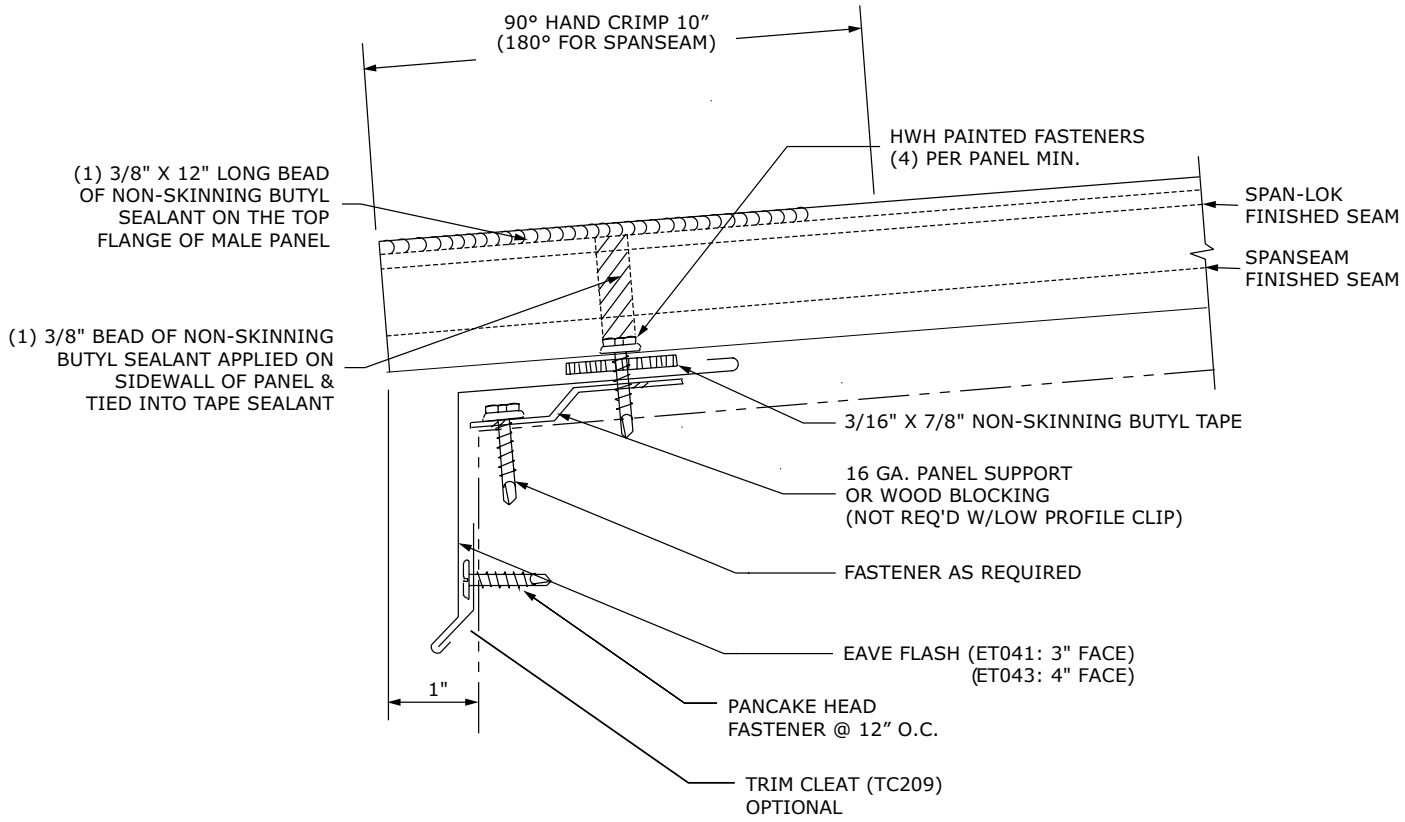
90° HAND CRIMP 10”
(180° FOR SPANSEAM)
HWH PAINTED FASTENERS
(4) PER PANEL MIN.
(1) 3/8" X 12" LONG BEAD
OF NON-SKINNING BUTYL
SEALANT ON THE TOP
FLANGE OF MALE PANEL
SPAN-LOK
FINISHED SEAM
SPANSEAM
FINISHED SEAM
(1) 3/8" BEAD OF NON-SKINNING
BUTYL SEALANT APPLIED ON
SIDEWALL OF PANEL &
TIED INTO TAPE SEALANT
3/16" X 7/8" NON-SKINNING BUTYL TAPE
16 GA. PANEL SUPPORT
OR WOOD BLOCKING
(NOT REQ'D W/LOW PROFILE CLIP)
FASTENER AS REQUIRED
EAVE FLASH (ET041: 3" FACE)
(ET043: 4" FACE)
1"
PANCAKE HEAD
FASTENER @ 12” O.C.
TRIM CLEAT (TC209)
OPTIONAL

Eave – Floating

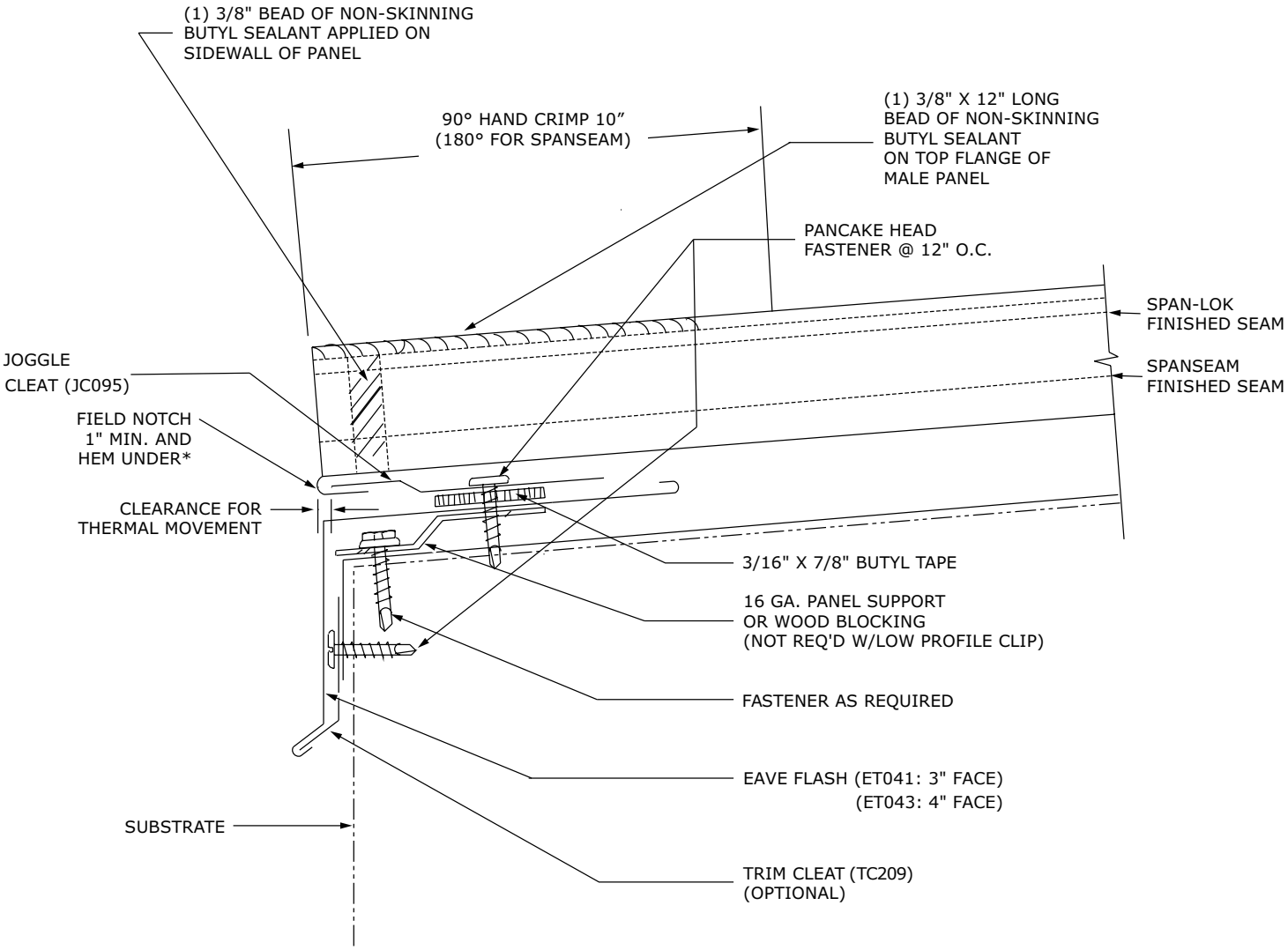

** Ask your AEP Span representative about factory notching.*

Eave with Gutter Floating

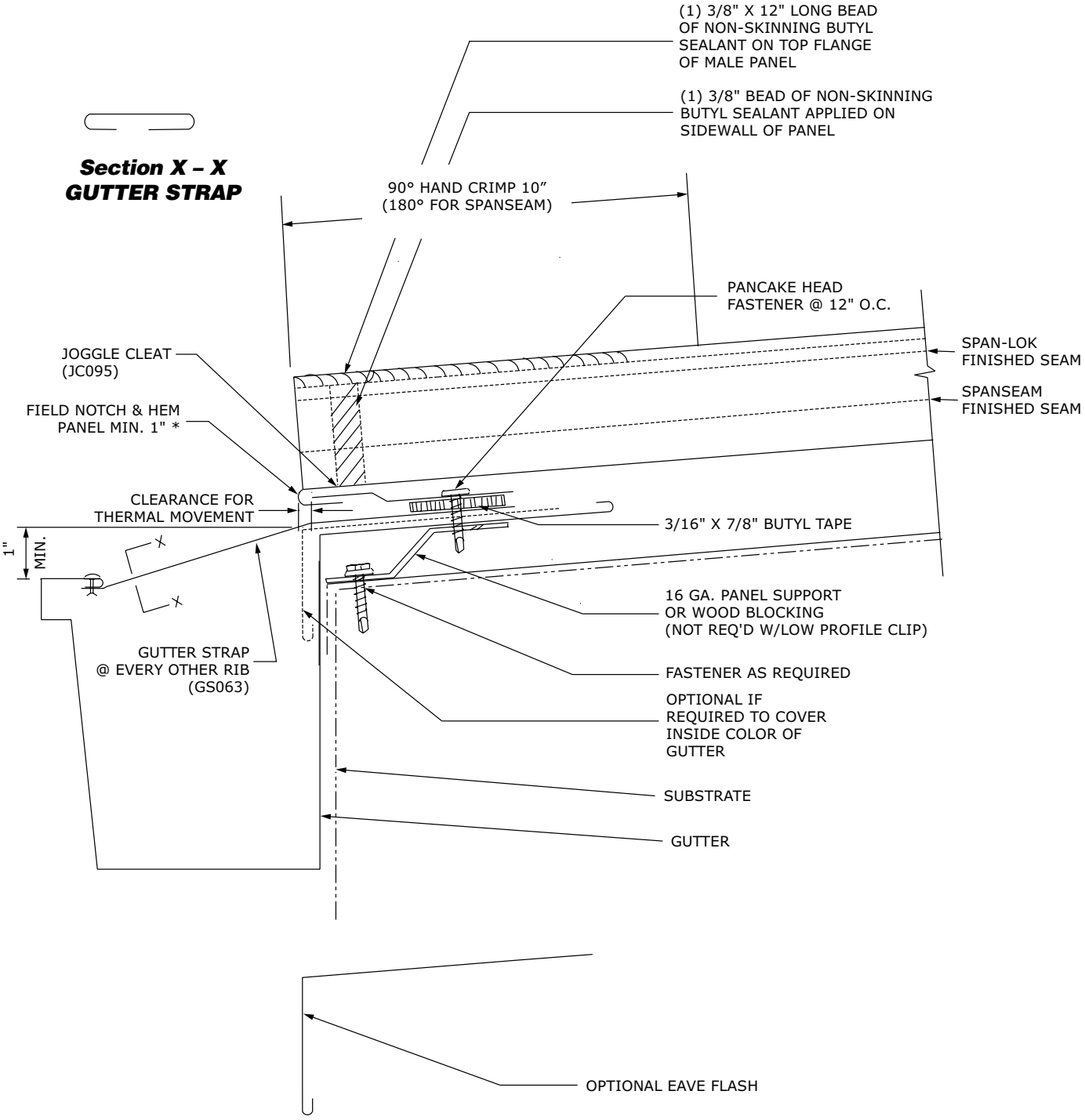

** Ask your AEP Span representative about factory notching.*

Rib Cover

(also refer to pages 31&32)

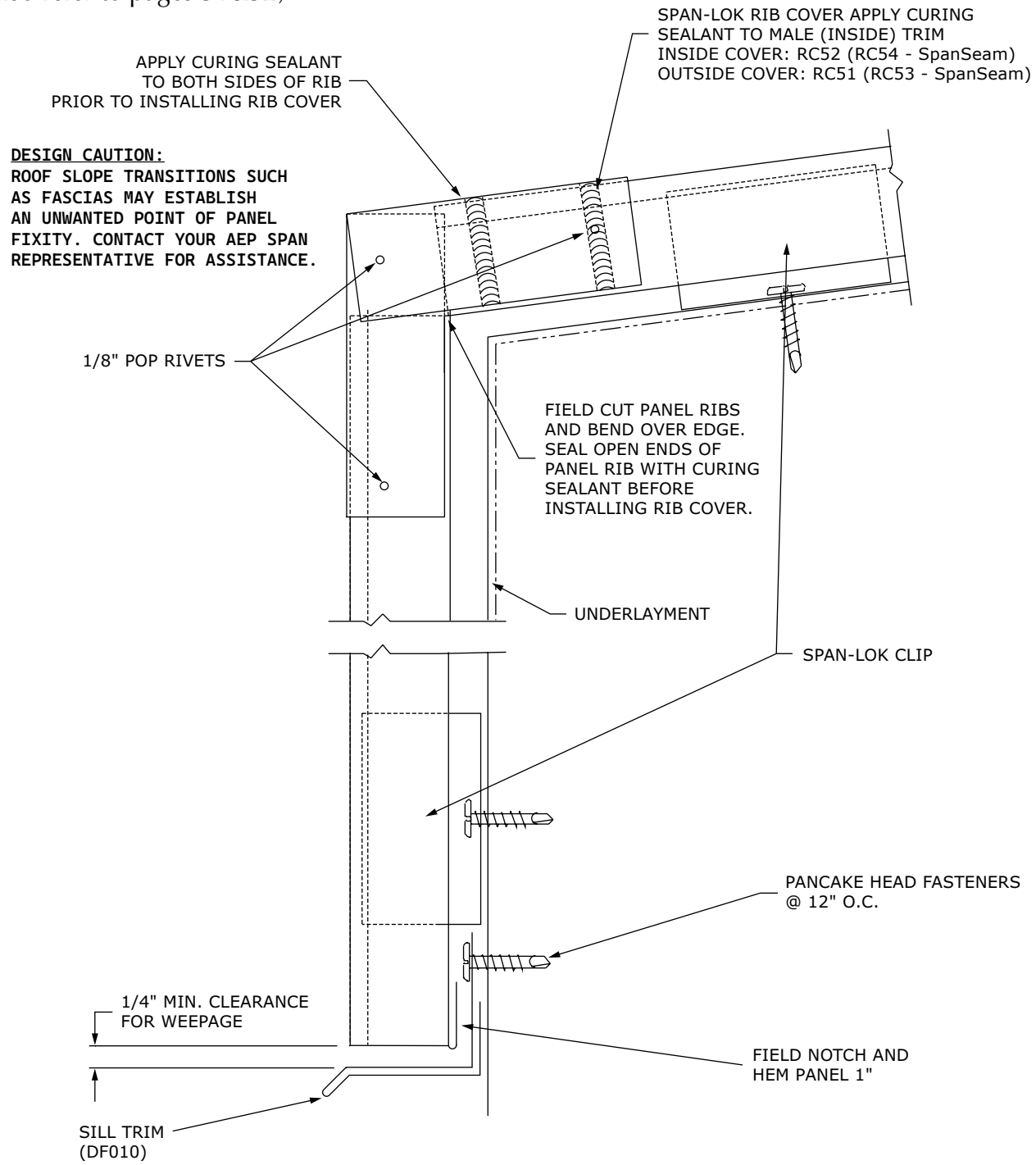

NOTE:

THE USE OF THIS DETAIL IS NOT RECOMMENDED IN SNOW CLIMATES.

Gable

Span-Lok™

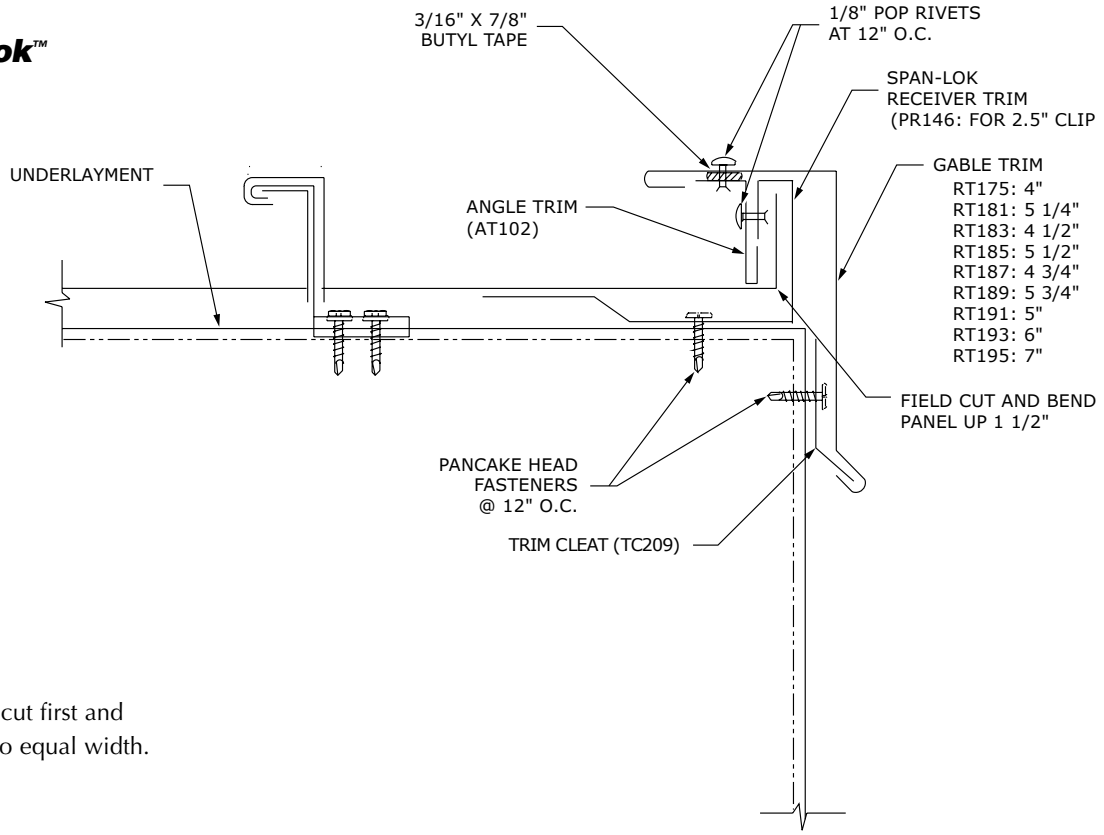

Note: Field cut first and last panels to equal width.

SpanSeam™

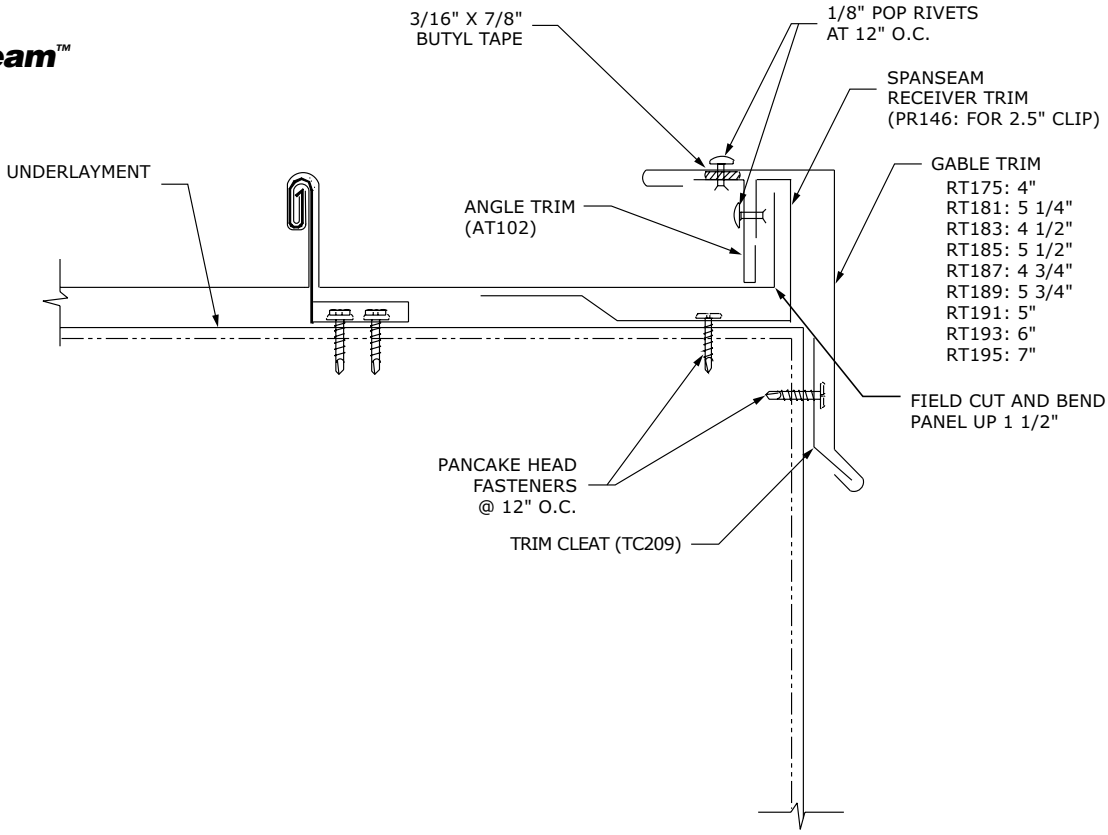

Rake Wall

Span-Lok™

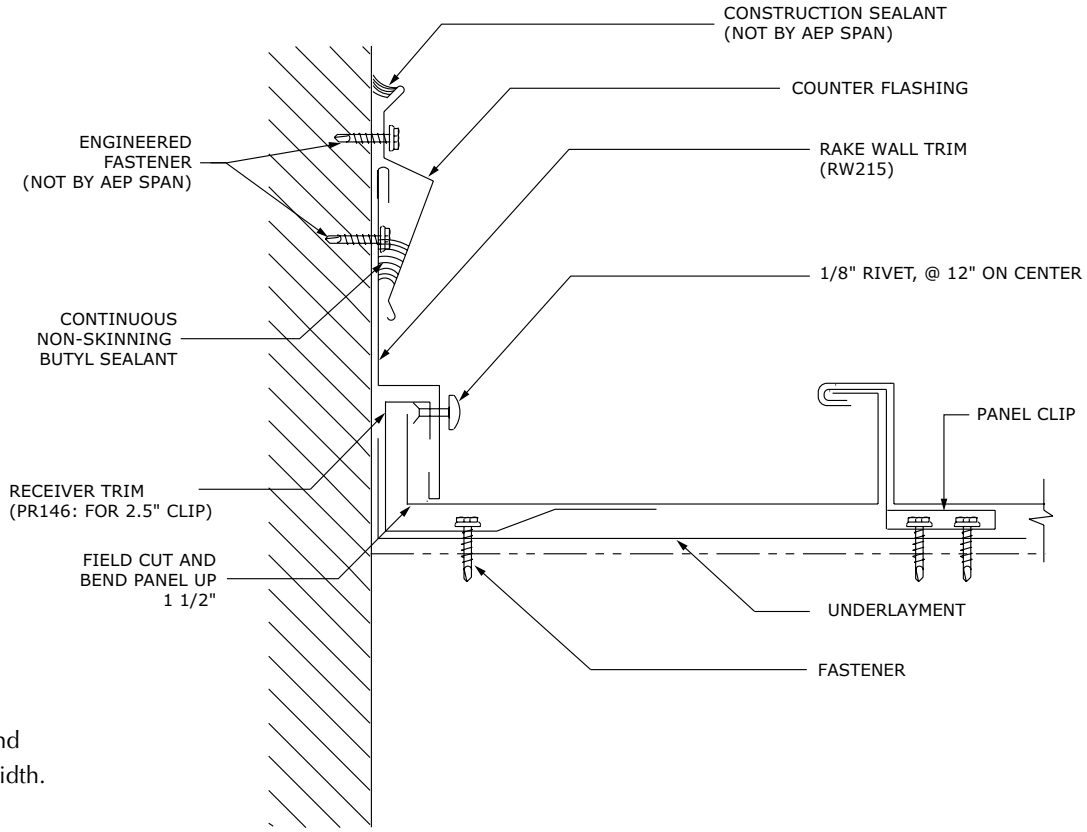

Note: Field cut first and last panels to equal width.

SpanSeam™

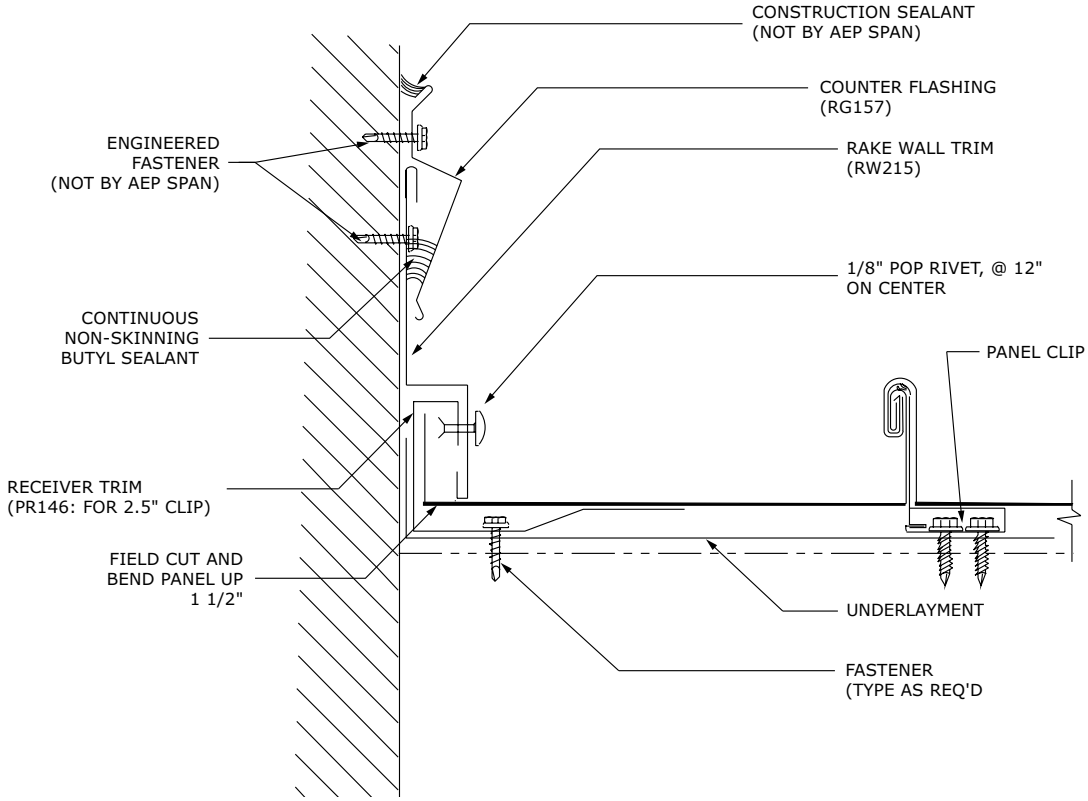

Head Wall – Fixed

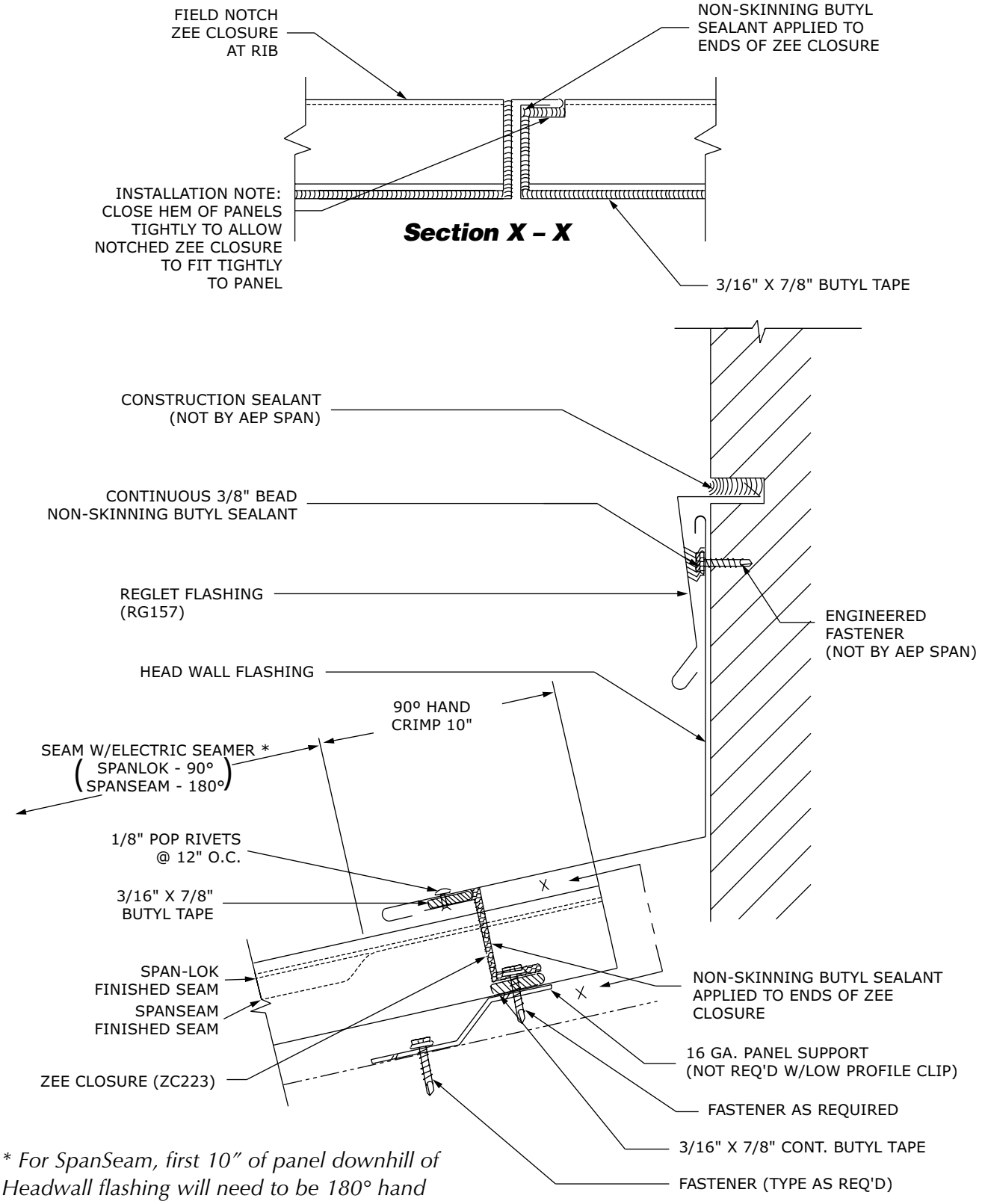

** For SpanSeam, first 10″ of panel downhill of Headwall flashing will need to be 180° hand crimped to get seamer on/off.*

Head Wall – Floating

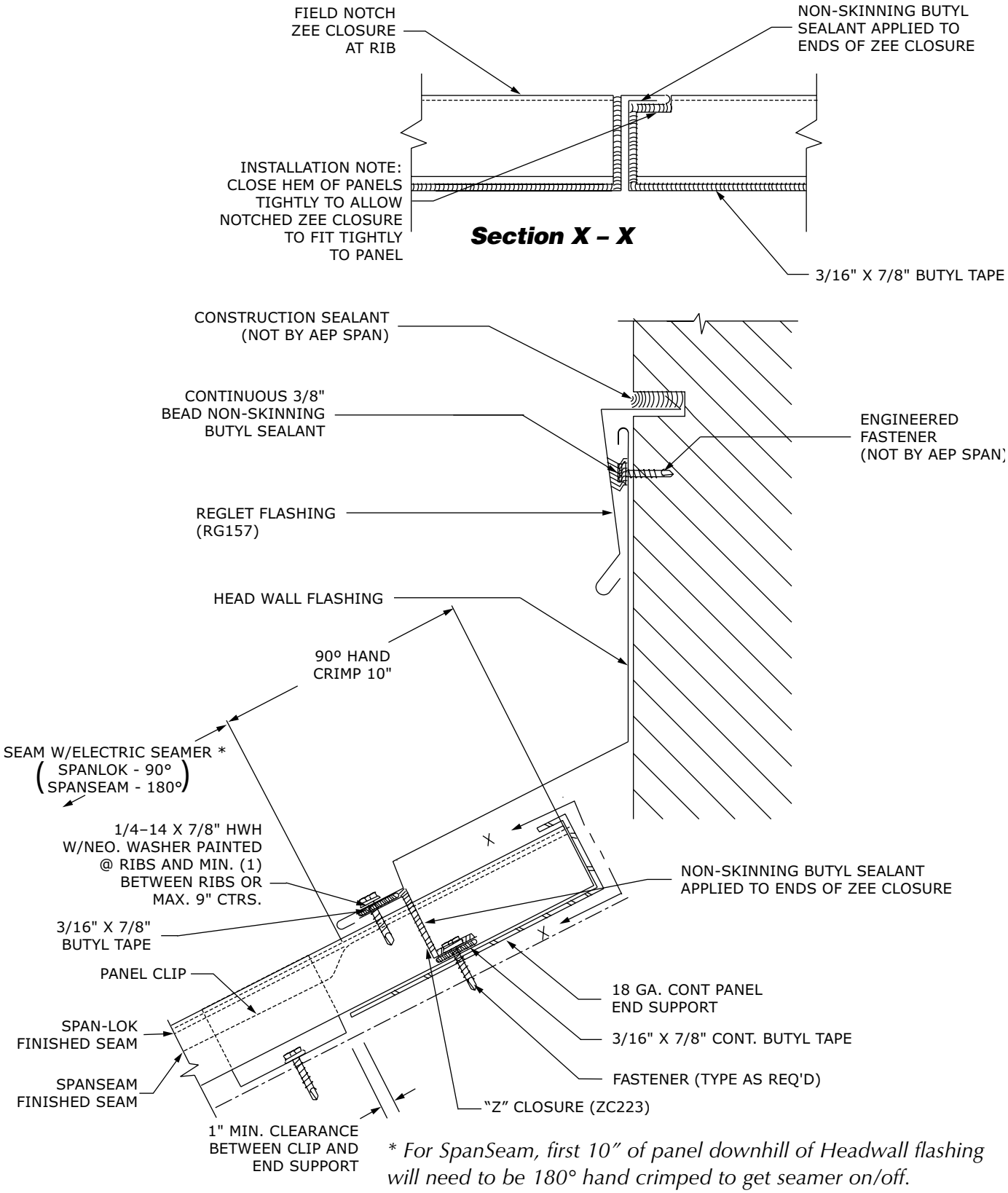

** For SpanSeam, first 10" of panel downhill of Headwall flashing will need to be 180° hand crimped to get seamer on/off.*

High Eave – Fixed

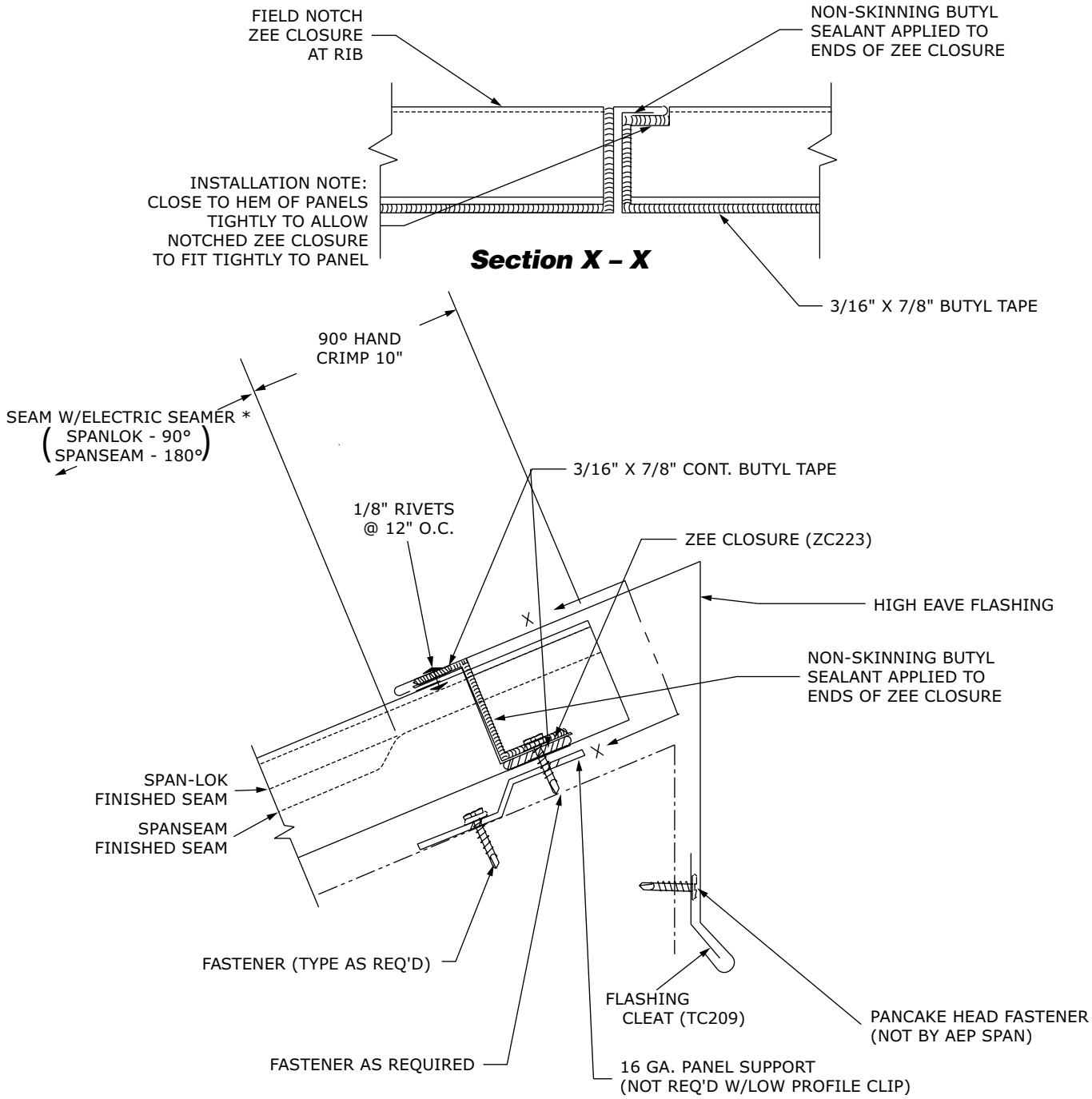

** For SpanSeam, first 10″ of panel downhill of High Eave flashing will need to be 180° hand crimped to get seamer on/off.*

High Eave – Floating

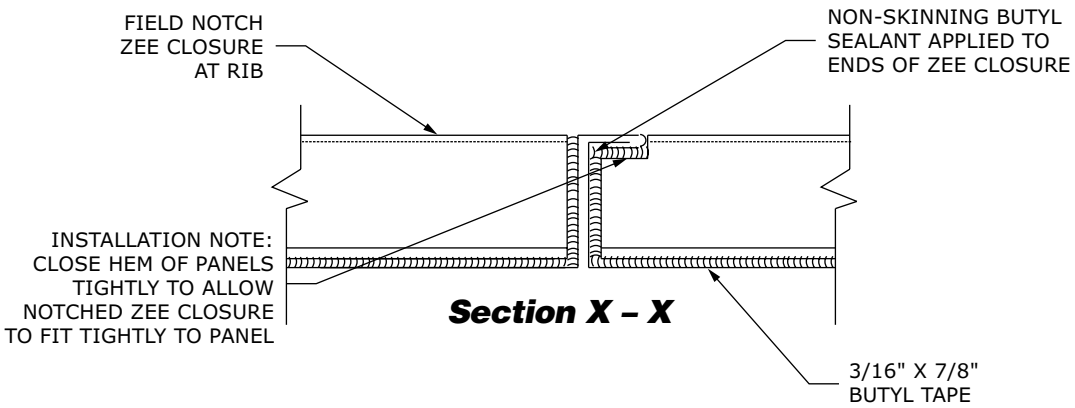

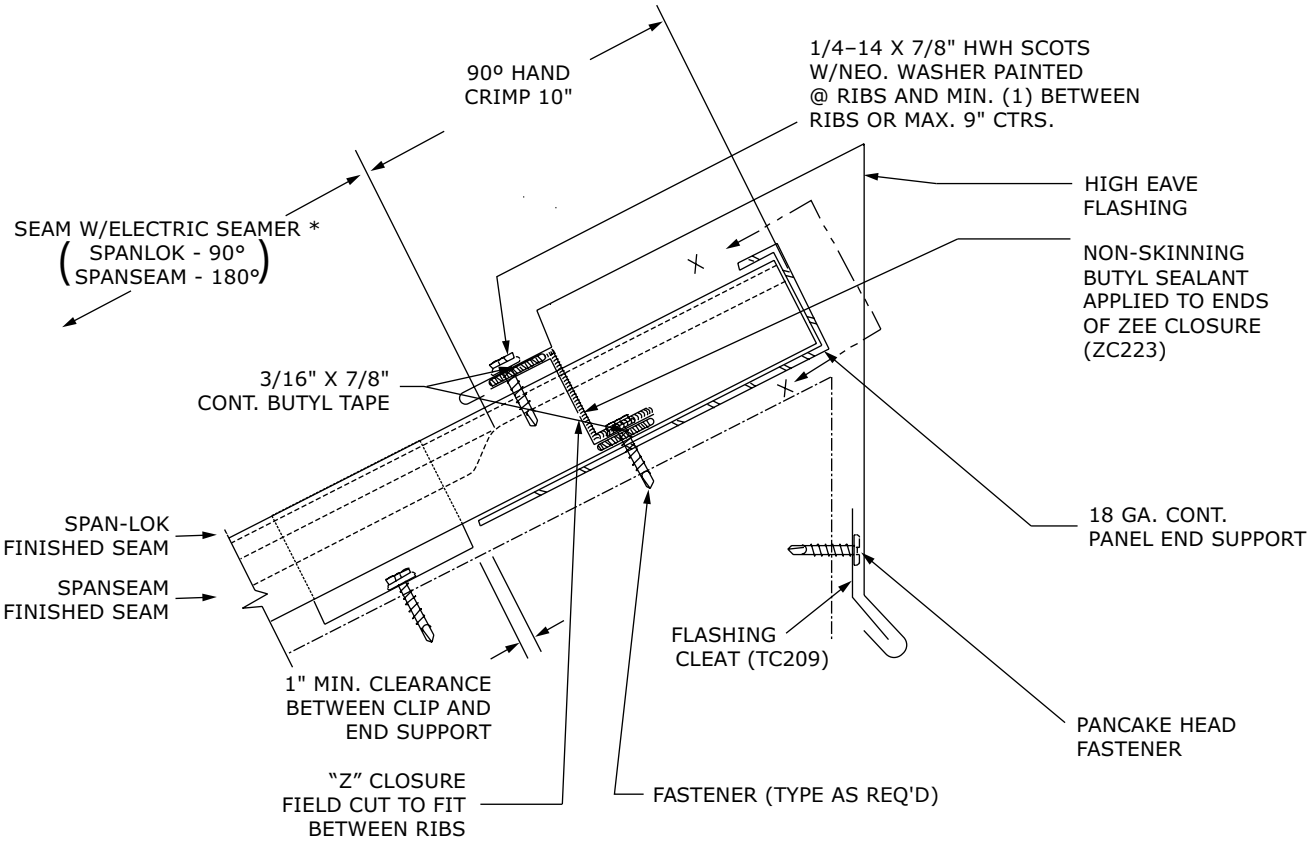

** For SpanSeam, first 10" of panel downhill of High Eave flashing will need to be 180° hand crimped to get seamer on/off.*

Ridge/Hip – Fixed

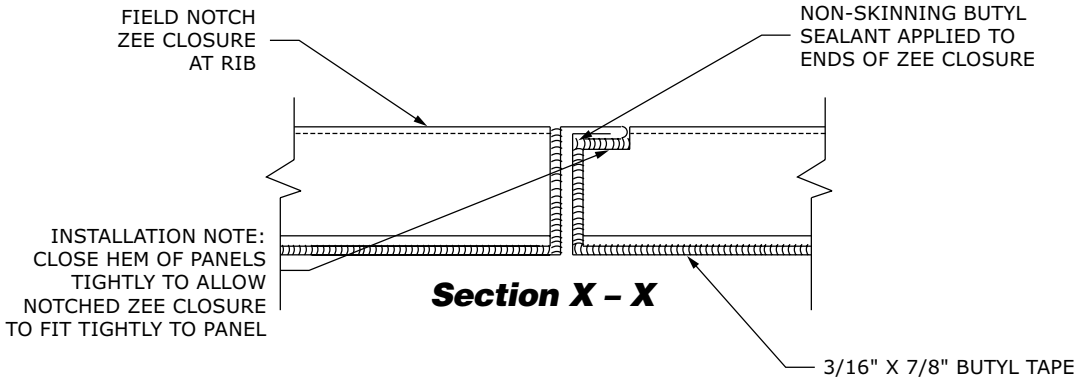

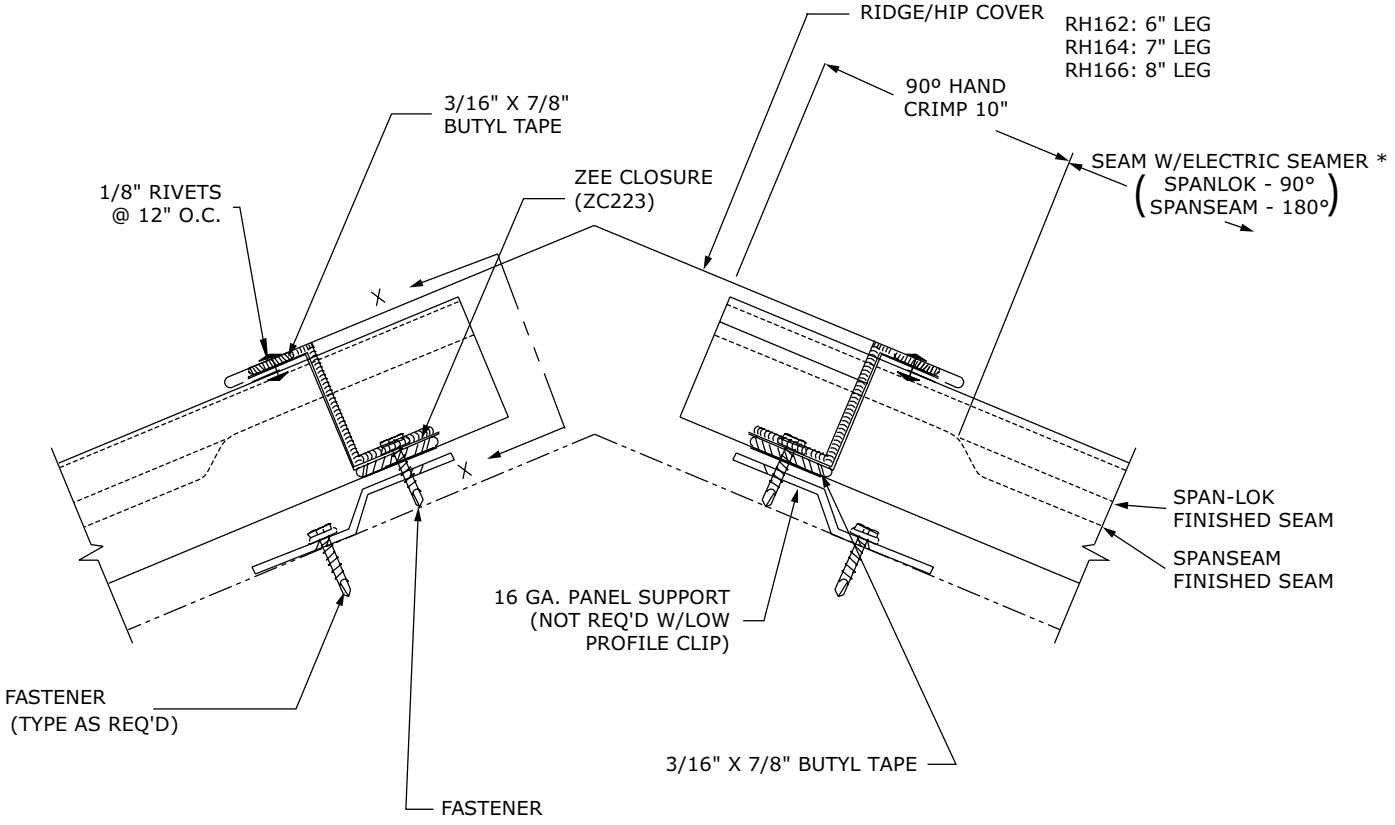

** For SpanSeam, first 10″ of panel downhill of Ridge/Hip flashing will need to be 180° hand crimped to get seamer on/off.*

Ridge/Hip – Floating

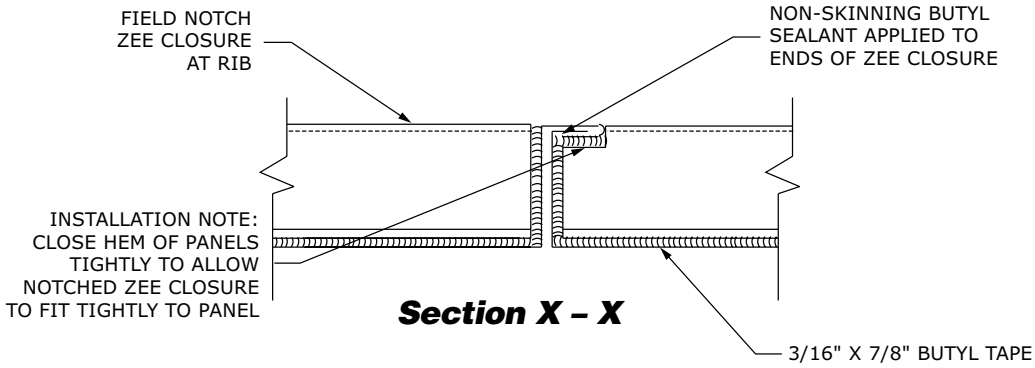

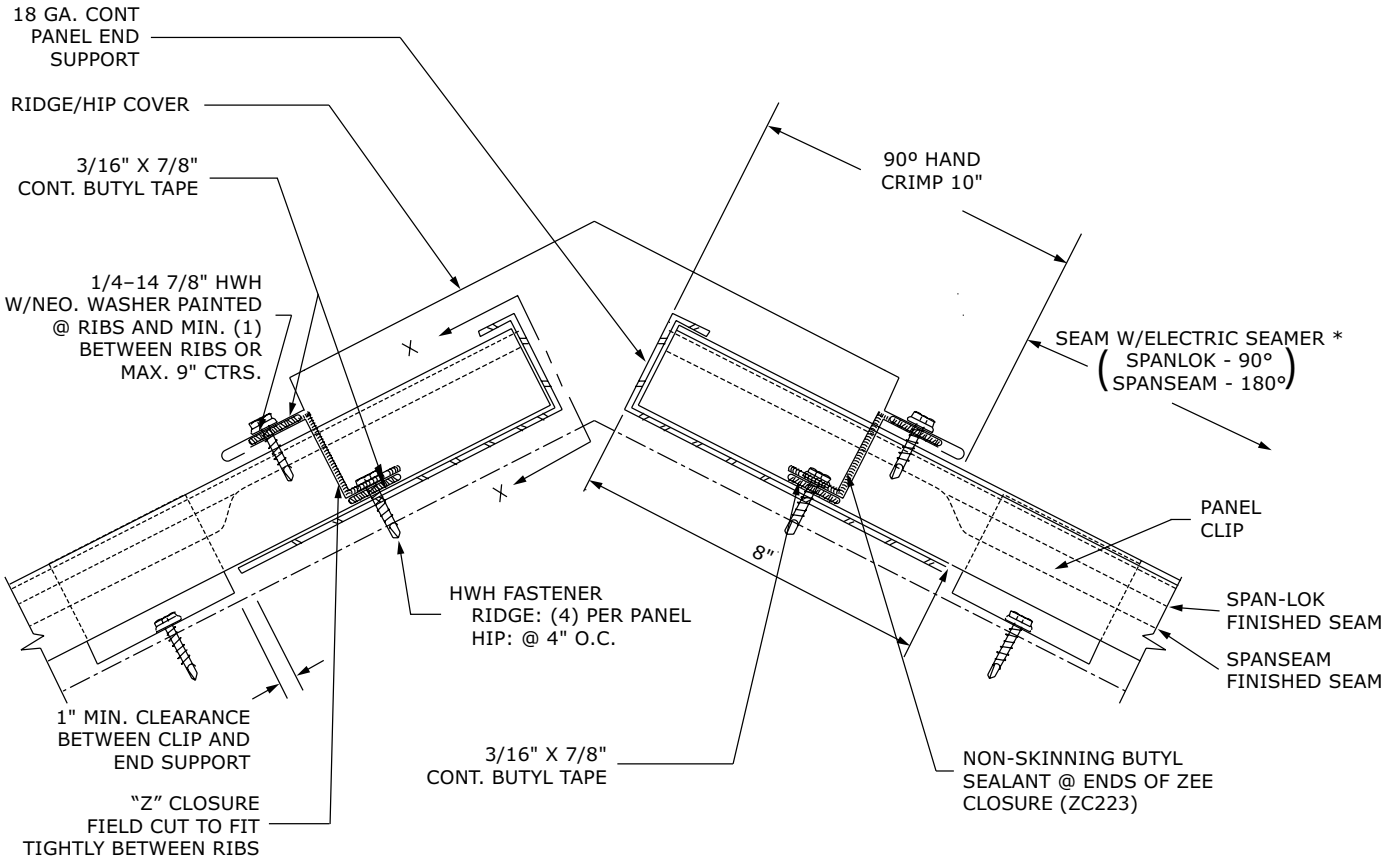

** For SpanSeam, first 10" of panel downhill of Ridge/Hip flashing will need to be 180° hand crimped to get seamer on/off.*

High-Low Slope Transition

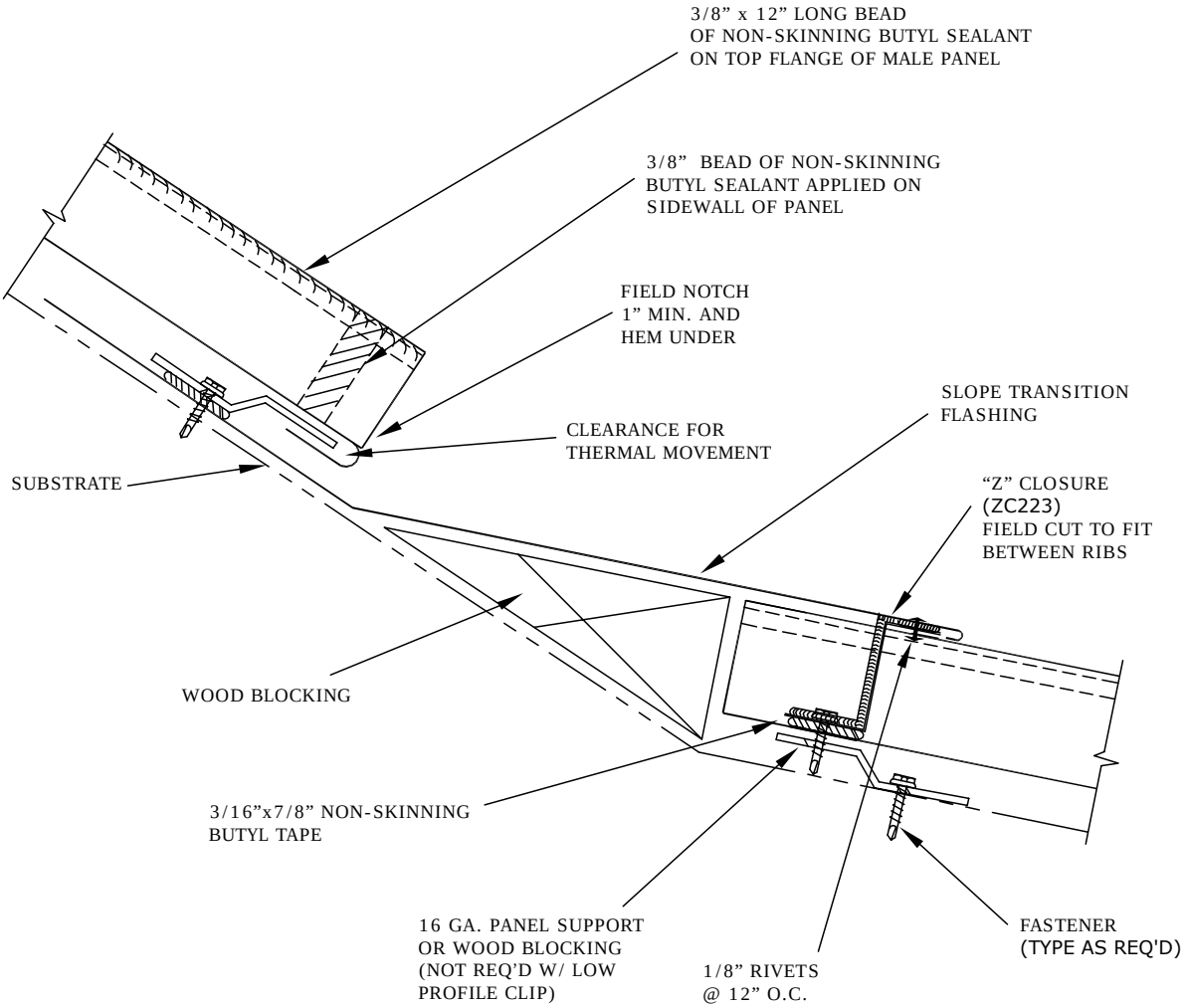

Low-High Slope Transition

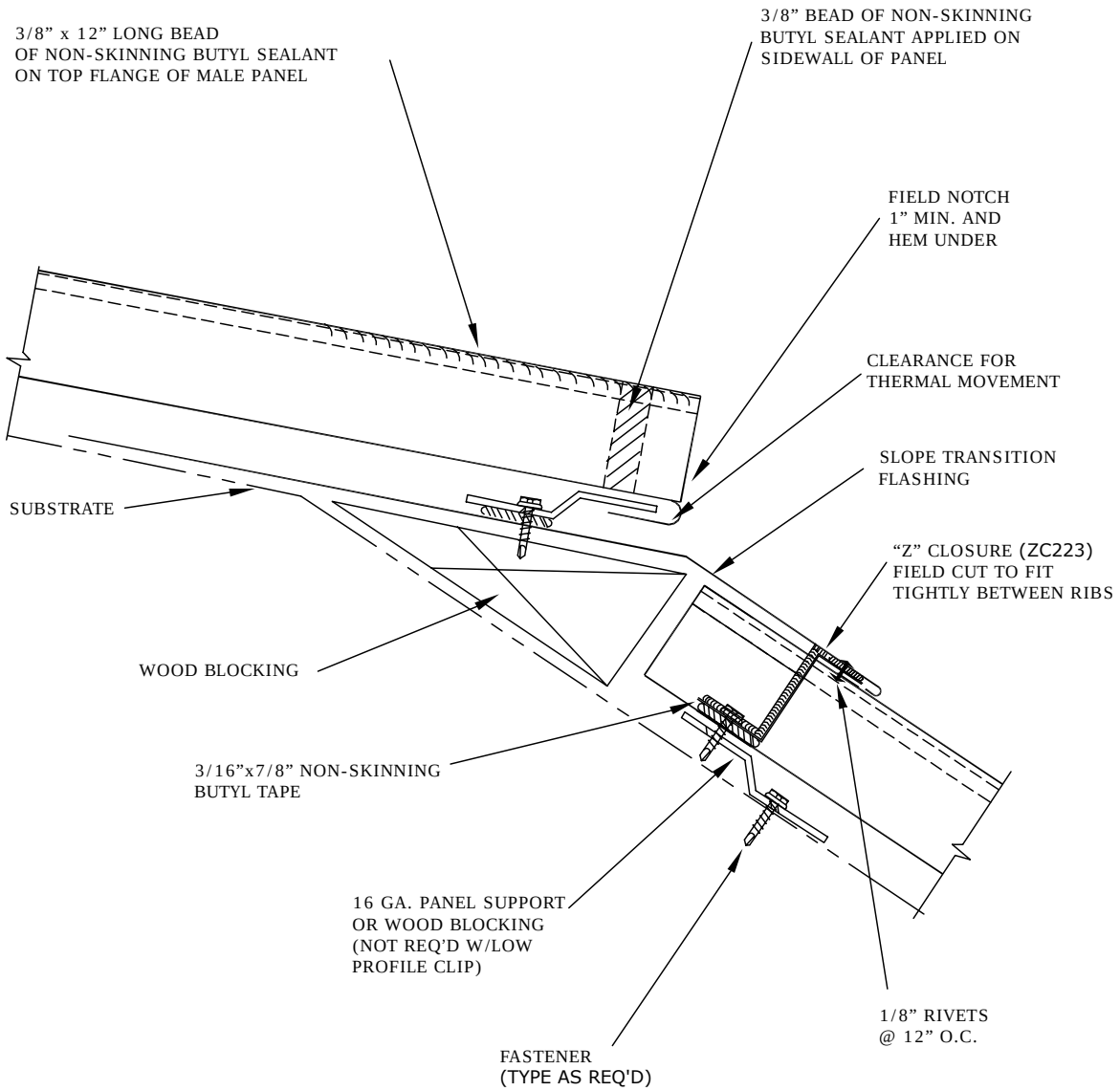

Valley – Fixed

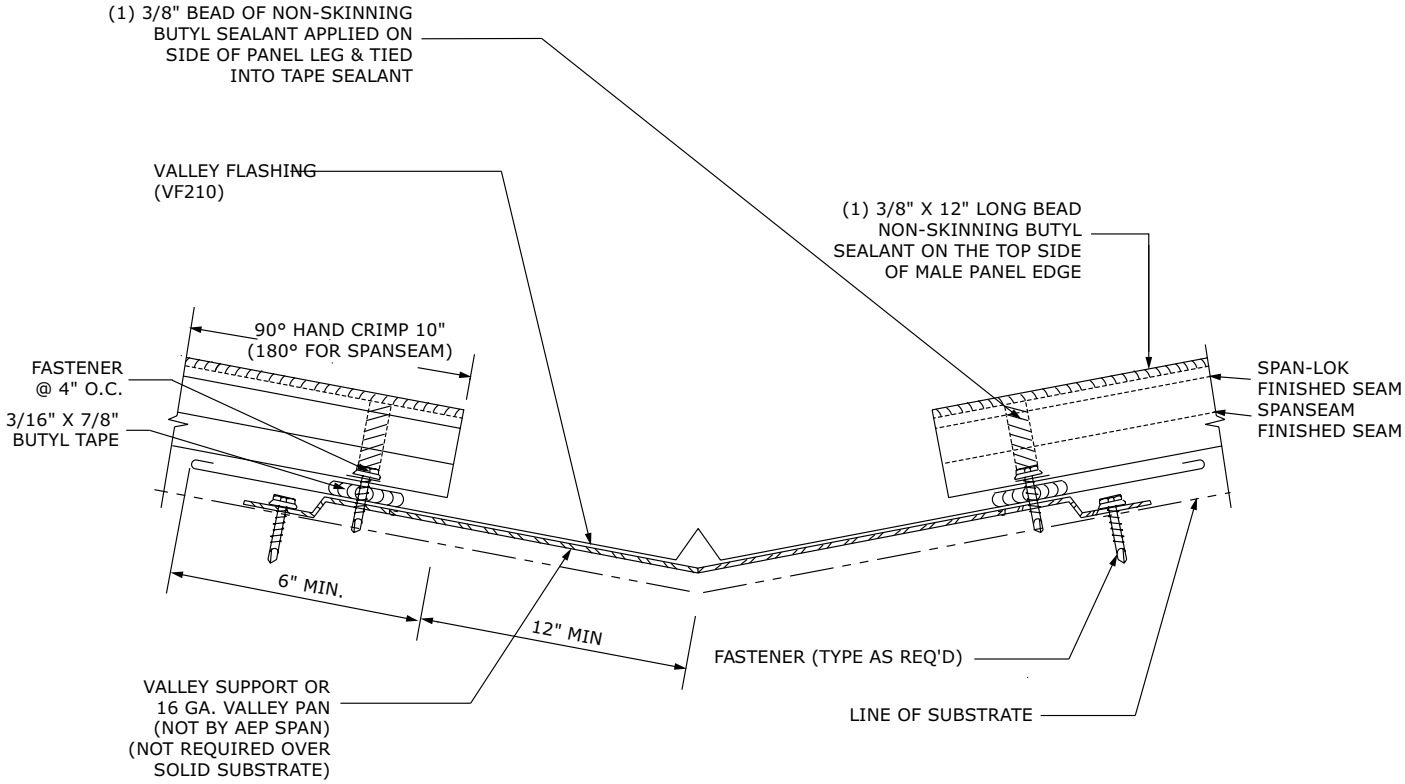

Valley – Floating

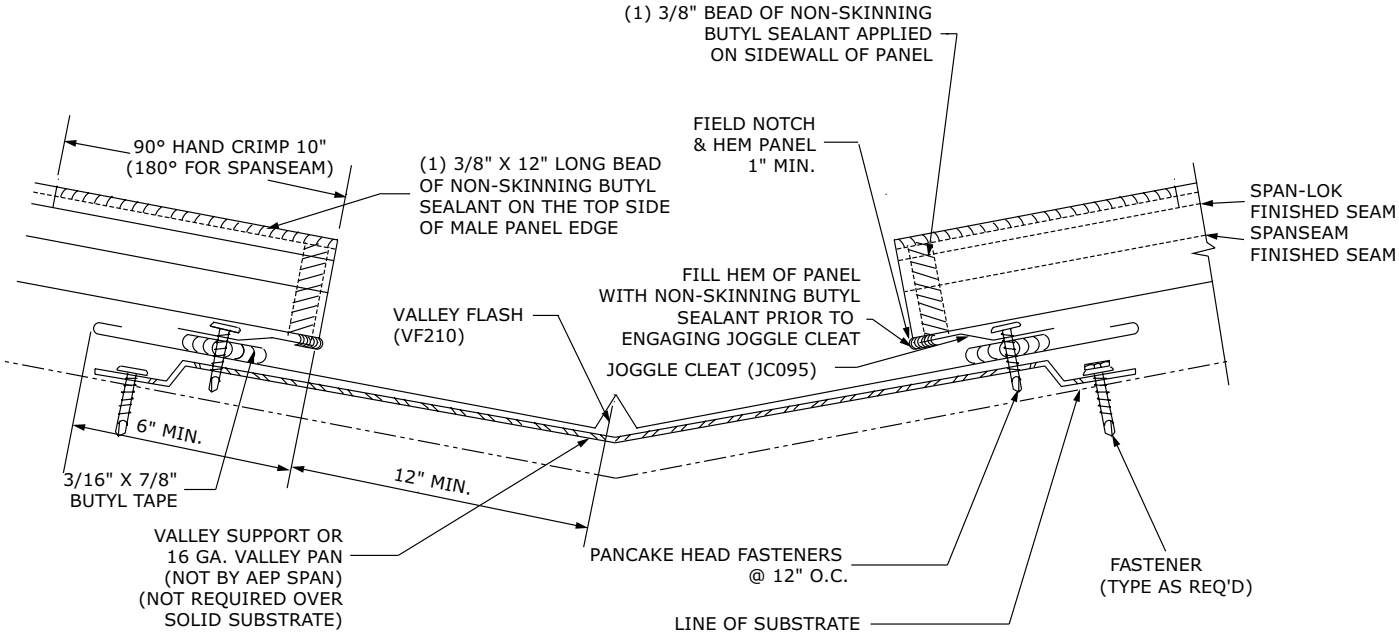

Panel Package Handling

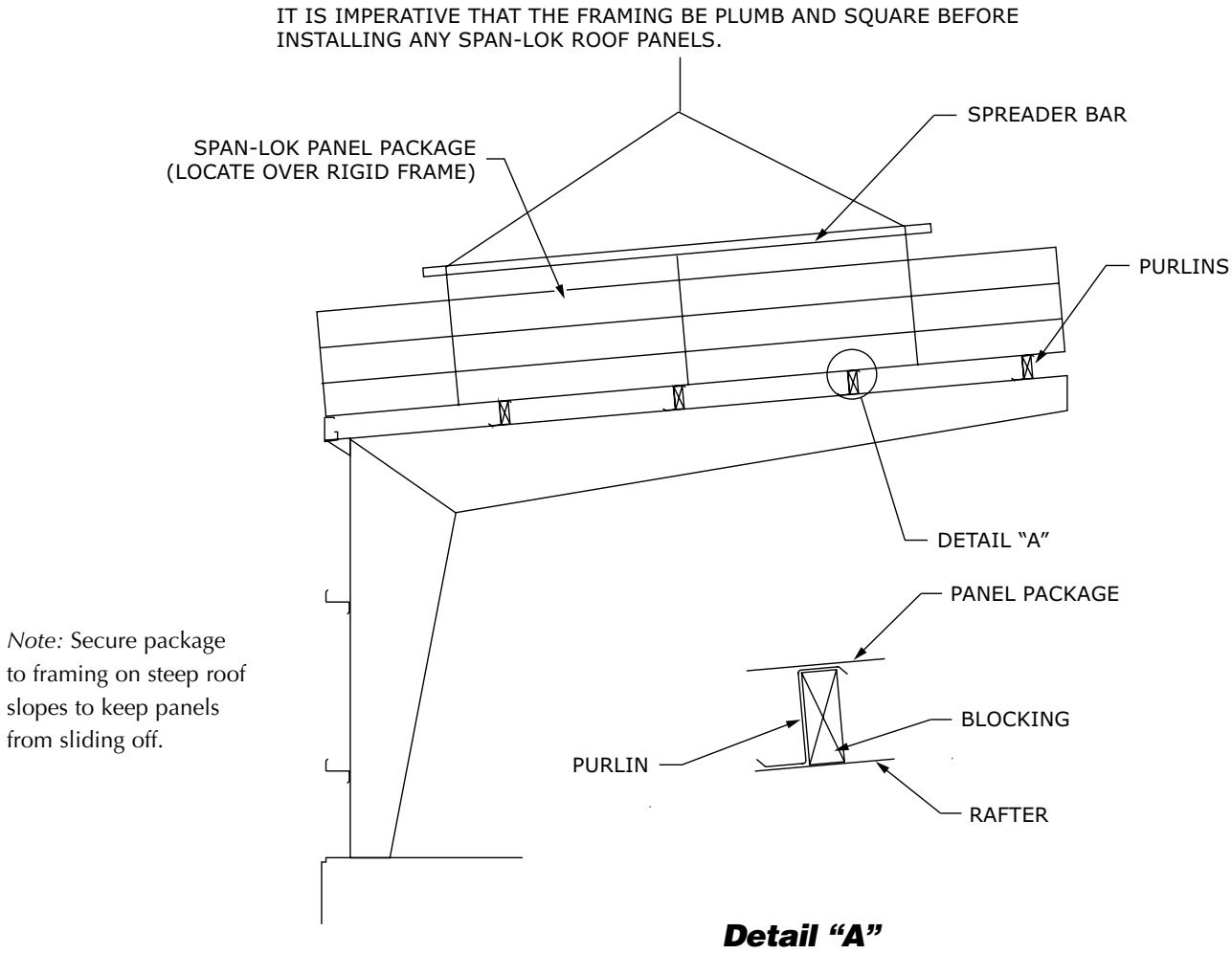

Note: Secure package to framing on steep roof slopes to keep panels from sliding off.

Procedures

- To facilitate the handling of Span-Lok™ panels, panel packages can be lifted and placed on the roof if located at a rigid frame and with blocking placed to prevent the purlins from rolling over.
- When lifting packaged sheets, make certain that they are adequately supported, panels less than 20′ in length can normally be lifted with a forklift.

When lifting panels in excess of 20′, it is recommended that a spreader bar and slings be used. As a rule when lifting, no more than 1/3 of the total length of the panel should be left unsupported, and no more than 8′ should be cantilevered beyond spreader bars.

Panel Layout

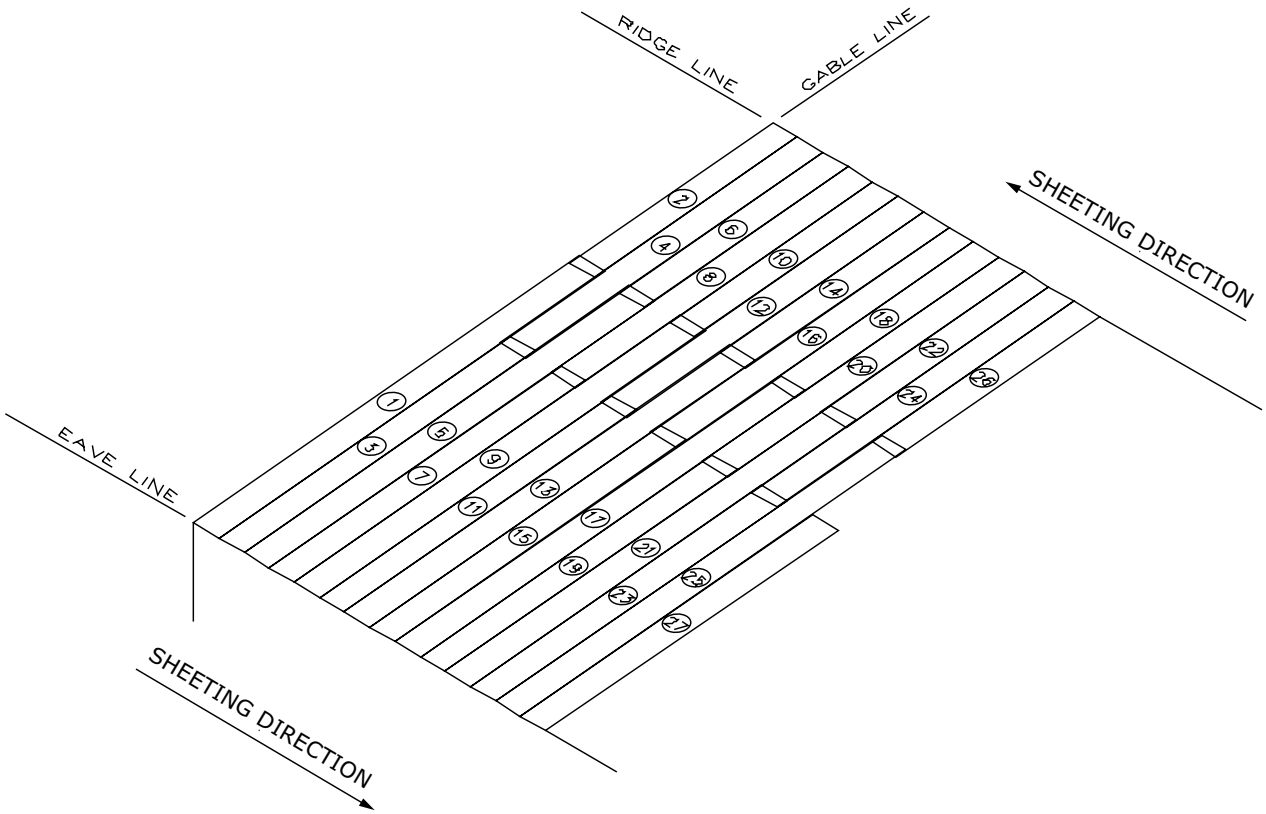

Sheeting Direction and Panel Sequence

Procedure

- The sheeting sequence for the Span-Lok™ and SpanSeam™ is as indicated above. Please note the placement of the panels by the circled numbers. The uphill panel at an endlap will be swedged on the lower end for nesting purposes. Endlaps of adjacent panels must be staggered at least one purlin space to prevent material build-up.

Note: Gable buildings without panel endlaps can be sheeted simultaneously from either end of the building. However, if the building has panel endlaps, the roof must be sheeted left to right looking up the slope.

Panel Seaming

ROOF PERFORMANCE
THE ROOF PANELS MUST BE CORRECTLY SEAMED BEFORE THE ROOF SYSTEM CAN PROVIDE THE FULLY DESIGNED WIND LOAD AND WEATHER RESISTANCE CAPABILITY.

WHEN TO SEAM
WHENEVER POSSIBLE, THE INSTALLED ROOF PANELS SHOULD BE SEAMED BY THE FINISH OF EACH DAY'S WORK. IF HIGH WIND OR RAIN/SNOW CONDITIONS ARE IMMINENT, THE INSTALLED ROOF PANELS MUST BE SEAMED BEFORE SUCH CONDITIONS OCCUR.

SEAMER NOTES / SPECIFICATIONS
ALL AEP SPAN CUSTOMERS MUST WORK DIRECTLY WITH DI ROOF SEAMERS OR QUALITY ROOF SEAMERS FOR SEAMER RENTALS. THESE ARE THE ONLY AEP SPAN CERTIFIED SEAMER SUPPLIERS.

TEMPORARY SEAMING
IT MAY NOT ALWAYS BE PRACTICAL OR FEASIBLE TO SEAM THE ROOF PANELS UNTIL AFTER THE ROOF PANEL INSTALLATION IS COMPLETE. SEAMED ROOF PANELS ARE DIFFICULT TO REPOSITION OR REPLACE. SEAMERS MAY NOT ALWAYS BE AVAILABLE DURING THE ENTIRE ROOF INSTALLATION. IN SUCH CASES, IT MAY BE DESIRABLE TO TEMPORARILY HAND CRIMP THE ROOF PANELS AT CLIPS, THEN LATER COMPLETE THE INSTALLATION WITH THE SEAMER.

IMPORTANT: TEMPORARY HAND CRIMPING MUST BE APPROVED BY THE PROJECT'S DESIGNER.

SEAMING CAPABILITIES:

SPAN–LOK HP:

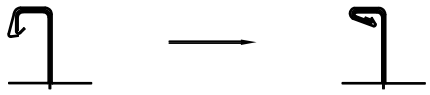

PRIOR TO SEAMING (SHOWN AT CLIP) — COMPLETED SEAM

SPAN–LOK / SPANSEAM:

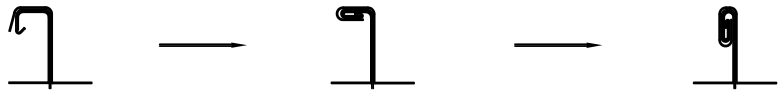

PRIOR TO SEAMING (SHOWN AT CLIP) — COMPLETED SEAM (SPAN–LOK) — COMPLETED SEAM (SPANSEAM)

SEAMER OPERATION – IMPORTANT NOTES
ALWAYS ATTACH SAFETY HOOK TO PREVENT SEAMER FROM FALLING OFF ROOF.

REMOVE ANY PROTECTIVE PLASTIC FILM FROM PANELS PRIOR TO SEAMING.

ALL CLIPS REQUIRE HAND CRIMPING PRIOR TO SEAMING TO ENSURE PROPER PANEL INSTALLATION AND TO REDUCE POTENTIAL FOR PANEL SCRATCHING. HAND CRIMP FIRST 10" OF PANEL ENDS BEFORE SETTING SEAMER IN PLACE.

DO NOT RUN SEAMER PAST END OF PANELS; DOING SO INCREASES THE RISK FOR PERSONAL INJURY AND/OR PROPERTY DAMAGE. THIS IS ESPECIALLY TRUE AT EAVES, ON HIGH SLOPES, OR AT OTHER COMMON RISK AREAS.

DO NOT RUN SEAMER BEYOND UPPER END OF PANEL OR ONTO ANY PREVIOUSLY SEAMED AREA. NEVER RUN THE SEAMER WITHIN 6" OF THE PANEL END OR PREVIOUSLY SEAMED AREA; FINISH WITH A HAND CRIMPER.

MORE DETAILED SEAMING INSTRUCTIONS ARE AVAILABLE FROM THE SEAMER SUPPLIERS.

Eave Hem

Step One

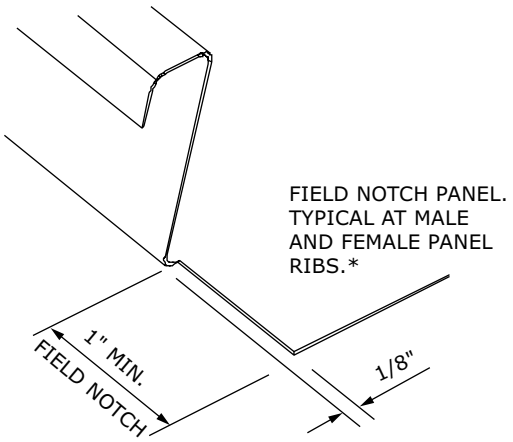

Step Two

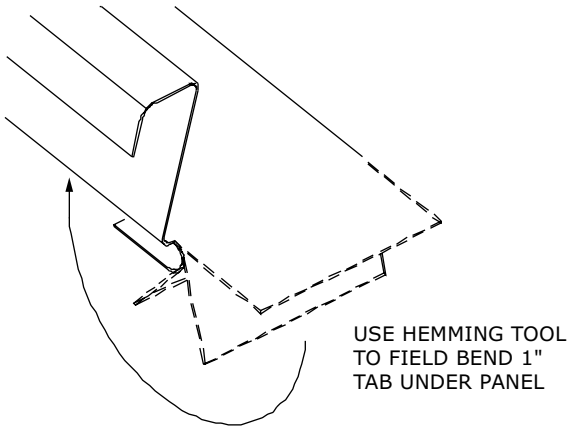

Step Three

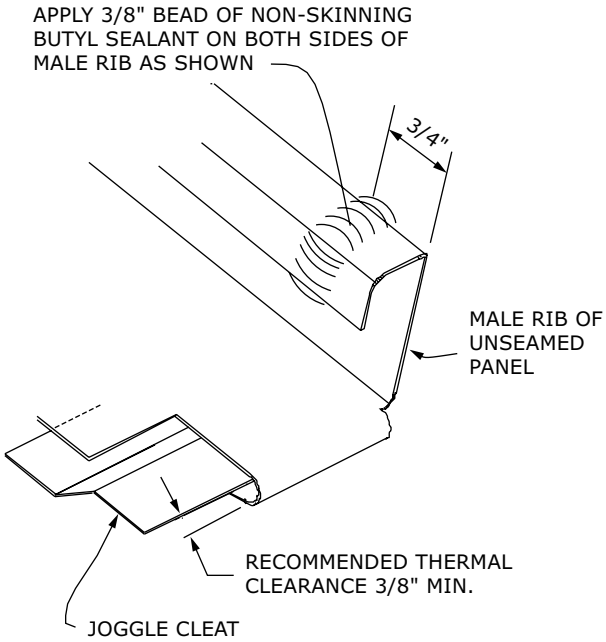

Hemmed & Seamed Span-Lok™ Panel

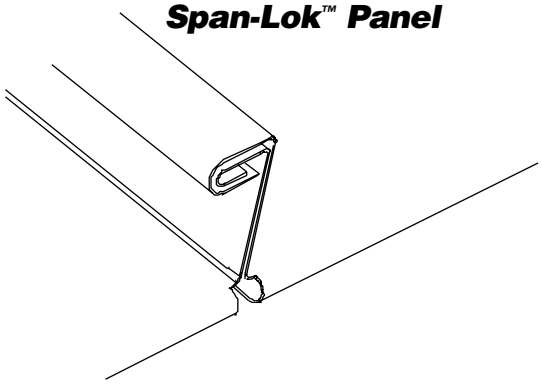

Hemmed & Seamed SpanSeam™ Panel

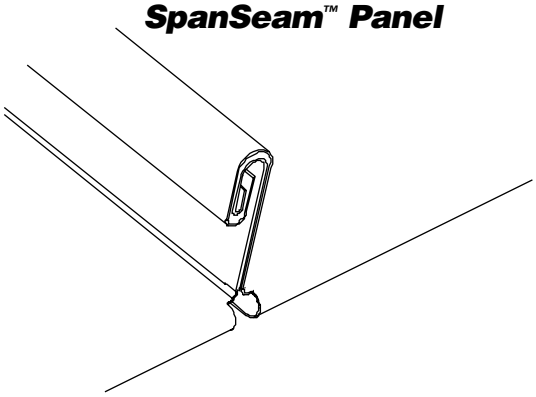

* Ask your AEP Span representative about factory notching.

Clip & Thermal Spacer

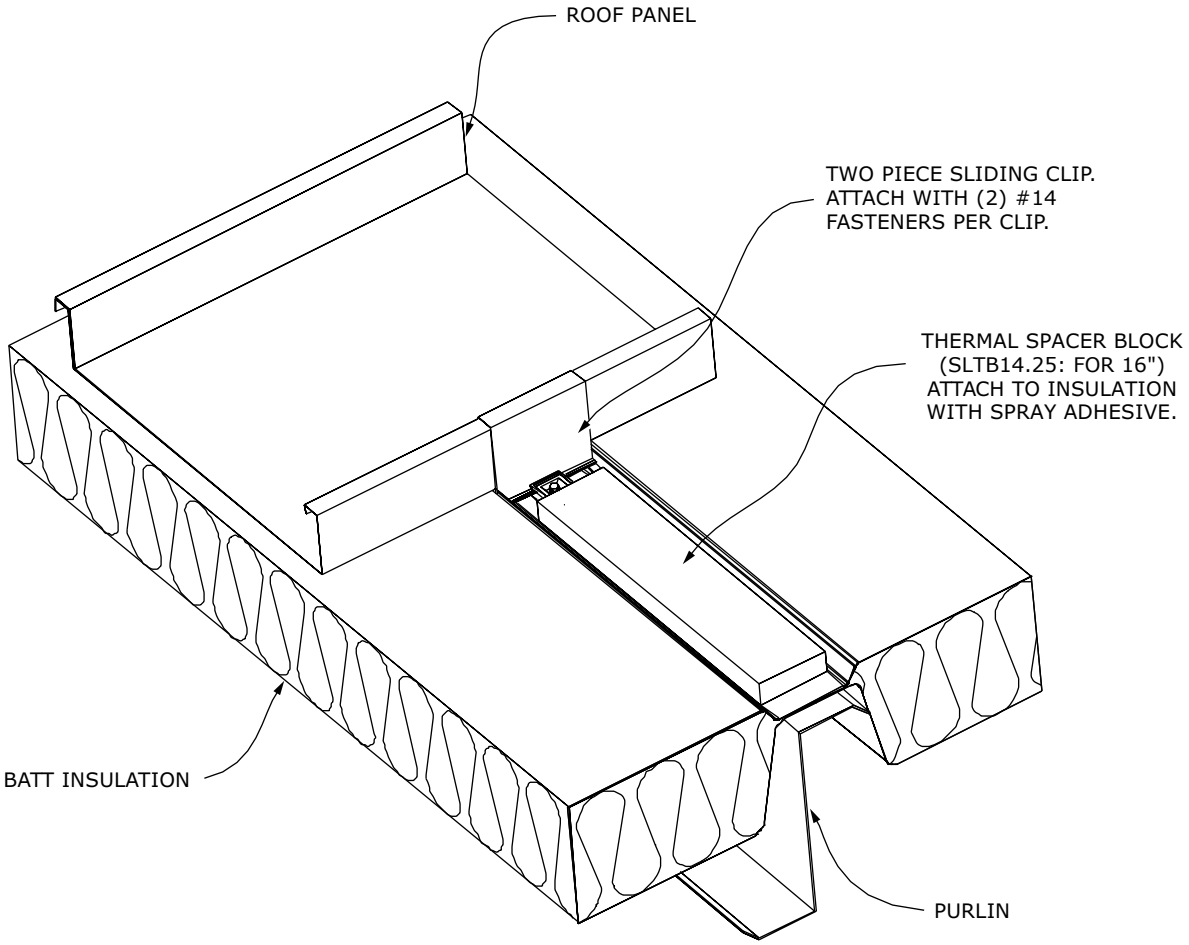

Note: Panels must be hand crimped to 90º at all clips before mechanically seaming panels. Only use hand crimping tool designed for the Span-Lok™/SpanSeam panels.

Panel Lap

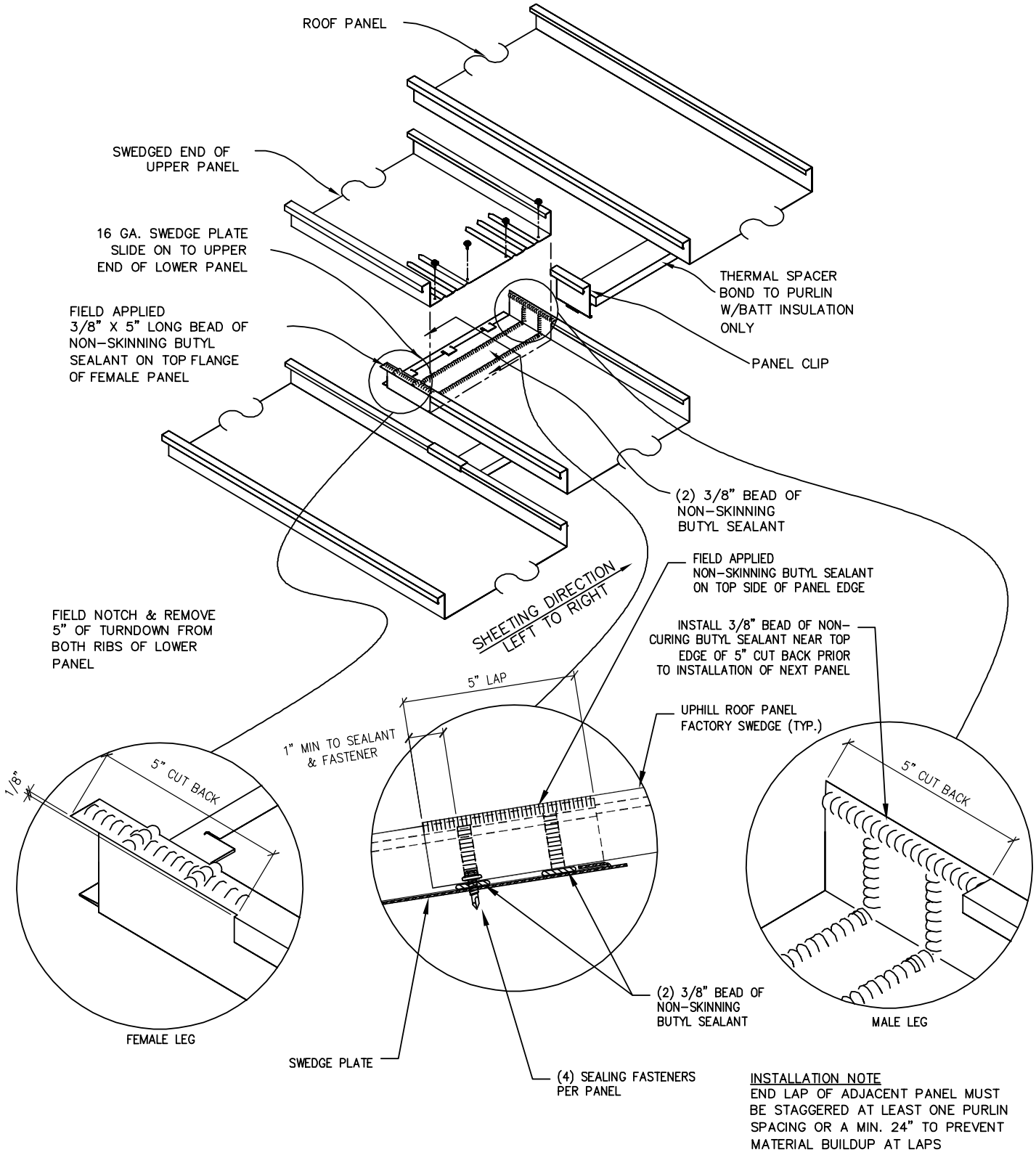

INSTALLATION NOTE
END LAP OF ADJACENT PANEL MUST BE STAGGERED AT LEAST ONE PURLIN SPACING OR A MIN. 24" TO PREVENT MATERIAL BUILDUP AT LAPS

Span-Lok Rib Cover

DESIGN CAUTION!
Roof slope transitions such as fascias may establish an unwanted point of panel fixity.

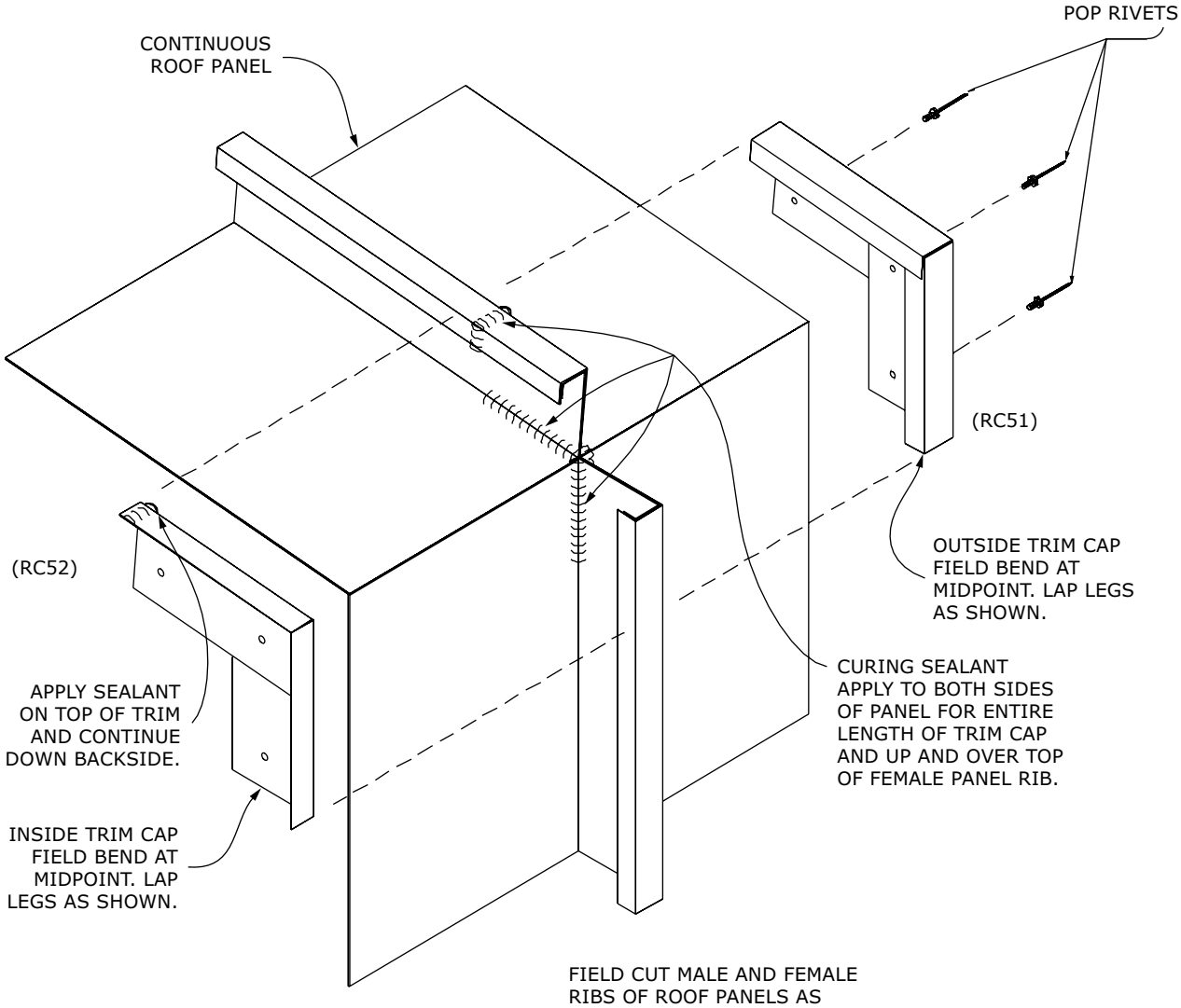

APPLY NON-SKINNING BUTYL SEALANT BETWEEN PANELS AT FIELD CUT. REFER TO EAVE DETAIL FOR LOCATION OF SEALANT. BEADS REQUIRED ON BOTH SIDES OF CUT.

SpanSeam™ Rib Cover

DESIGN CAUTION!
Roof slope transitions such as fascias may establish an unwanted point of panel fixity.

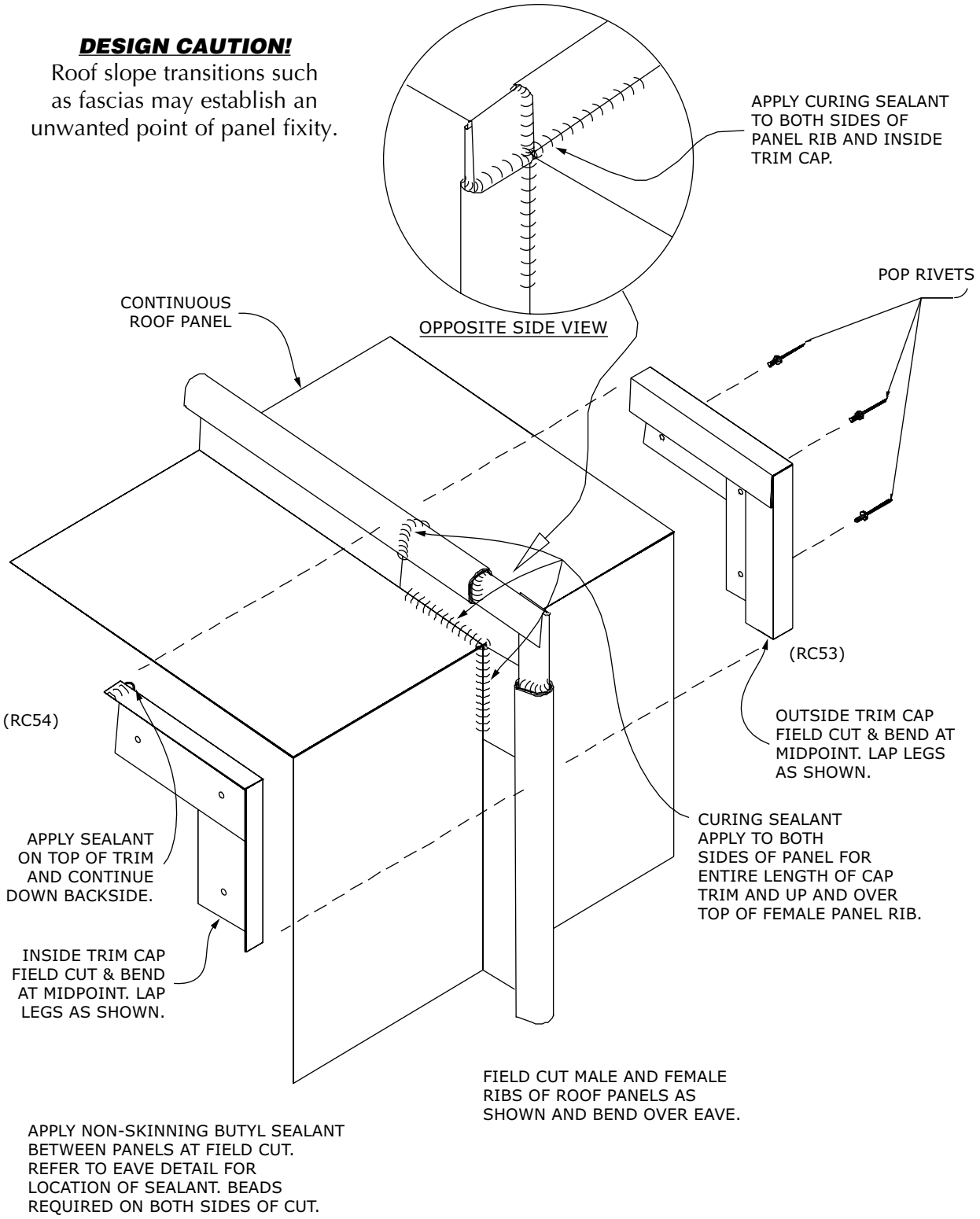

Curved Rake Detail

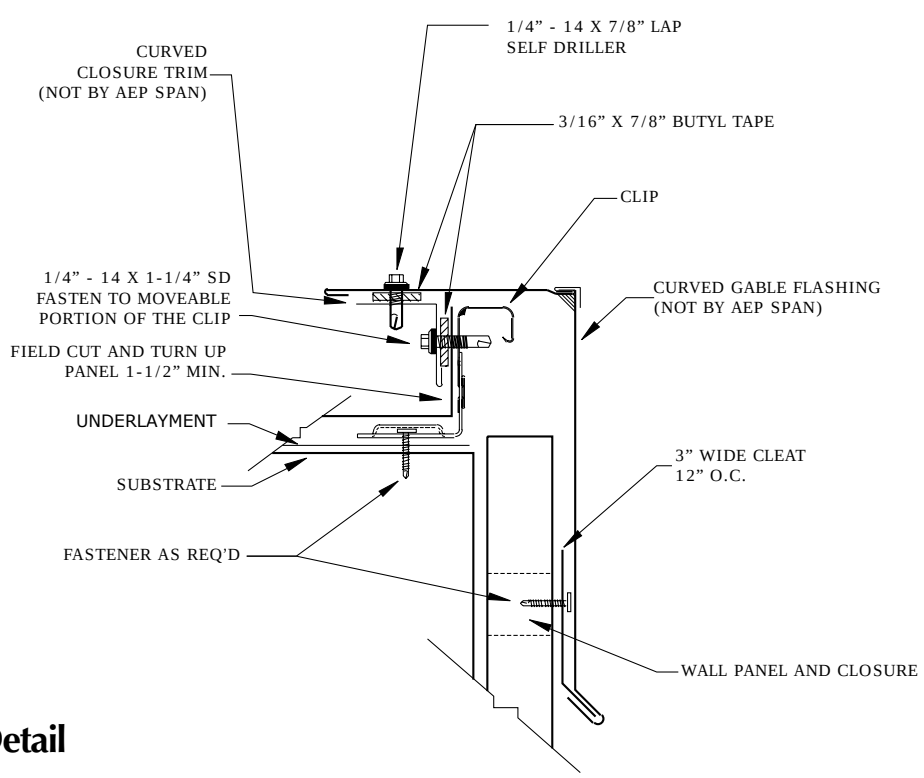

Curved Rake Wall Detail

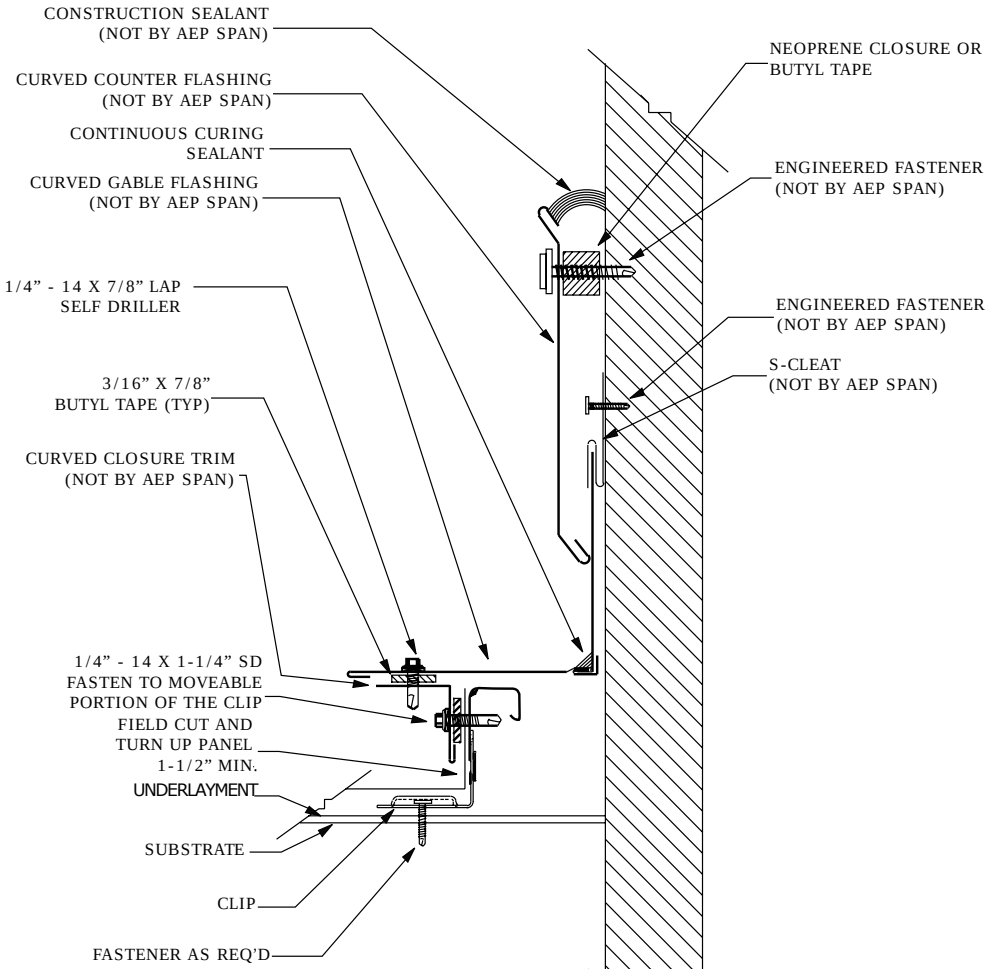

Appendix A
Span-Lok™ and SpanSeam™ Drag Load Table

Drag Load per Lineal foot of 16″ Span-Lok™ and SpanSeam™
Snow Load, psf

Slope	***25***	***30***	***35***	***40***	***45***	***50***	***55***	***60***	***65***
3:12	8.08	9.70	11.32	12.94	14.55	16.17	17.79	19.40	21.02
4:12	10.54	12.65	14.76	16.87	18.97	21.08	23.19	25.30	27.41
5:12	12.82	15.38	17.95	20.51	23.08	25.64	28.21	30.77	33.33
6:12	14.91	17.89	20.87	23.85	26.83	29.81	32.80	35.78	38.76
7:12	16.80	20.15	23.51	26.87	30.23	33.59	36.95	40.31	43.67
8:12	18.49	22.19	25.89	29.58	33.28	36.98	40.68	44.38	48.07
9:12	20.00	24.00	28.00	32.00	36.00	40.00	44.00	48.00	52.00
10:12	21.34	25.61	29.88	34.14	38.41	42.68	46.95	51.21	55.48
11:12	22.52	27.03	31.53	36.04	40.54	45.05	49.55	54.06	58.56
12:12	23.57	28.28	33.00	37.71	42.43	47.14	51.85	56.57	61.28

Note: To determine drag forces per panel, multiply the tabulated value by the panel length. Then refer to Appendix B (*page 30*) for fastener schedule.

Appendix B
Span-Lok™ and SpanSeam™ Drag Load Tables

Span-Lok™ and SpanSeam™ 24 gauge Drag Load Resistance

Fastener Type	***Substrate***	***Capacity***
#12 - 14 x 1″ S.D.	16ga steel	234
1/4 - 14 x 7/8″ S.D.	22ga steel	184
#14 x 1″ Type A Milled Point	1/2″ plywood	128
#14 x 1″ Type A Milled Point	Hem-Fir Dimensional Lumber	50

Drag Load Resistance (lbs.)

Fastener Type	***Number of Fasteners per Panel***								
	2	***3***	***4***	***5***	***6***	***7***	***8***	***9***	***10***
#12 - 14 x 1″ S.D.	468	702	936	1170	1404	1638	1872	2106	2340
1/4 - 14 x 7/8″ S.D.	368	552	736	920	1104	1288	1472	1656	1840
#14 x 1″ Type A Milled Point into 1/2″ plywood	256	384	512	640	768	896	1024	1152	1280
#14 x 1″ Type A Milled Point into Hem-Fir Dimensional	100	150	200	250	300	350	400	450	500

Notes:
1) #12-14 x 1″ S.D. values are based on a 16 gauge minimum substrate.
2) 1/4 - 14 x 7/8″ S.D. values are based on a 22 gauge minimum substrate.
3) #14 x 1″ Type A Milled Point values are based on a minimum 1/2″ C-D plywood or 1″ nominal Hem-Fir.
4) Fasteners must be located a minimum of 1″ from each other and from the end of the panel.

Example:
Span-Lok™ and SpanSeam™ attaching to 1/2″ plywood
4:12 slope
30 psf snow load
40 foot maximum sheet length

a. From Appendix A, find the Drag Load per Lineal Foot of panels (4:12, 30 psf snow load = 14.23 plf.)
b. Multiply the load by the length of the panel to obtain the total drag load on the sheet. (14.23 x 40 = 569.2 lbs. drag force per panel.)
c. Find the drag load in Appendix B. The nearest value is 640 lbs. The number of fasteners required per panel is five (5).

Contact your AEP Span representative if you have any questions about the use of appendices A or B.

MANUFACTURING FACILITY:

West Sacramento, California
2110 Enterprise Boulevard
West Sacramento, CA 95691

Tacoma, Washington
2141 Milwaukee Way
Tacoma, WA 98421

CUSTOMER SERVICE:
800-733-4955

Visit us at:
www.aepspan.com

AEP SPAN®

©2026 ASC Profiles LLC. All rights reserved.