PBR Panel

Installation Guide

Table of Contents

General

Notes . . . . . *i - ii*
Panel details *1*
Fasteners *2*

Roof Installation Details

Eave *4*
Eave with Gutter *5*
Gutter, Post-Hung *6*
Gable *7*
Valley *8*
Ridge *9*
Vented Ridge *10*
Peak *11*
Sidewall *12*
Endwall *13*
Slope Transition - High to Low *14*
Slope Transition - Low to High *15*
Panel Lap *16*
Roof Curb *17*
Curb Flashings *18*

Vertical Wall Installation Details

Base *20*
Sill *21*
Endwall *22*
Outside Corner *23*
Inside Corner *24*
Soffit, Front *25*
Soffit, Back *26*
Parapet *27*
Door / Window (Head) *28*
Opening, Head (Nail Fin) *29*
Door / Window (Jamb) *30*
Opening, Jamb (Nail Fin) *31*
Door / Window (Sill) *32*
Opening, Sill (Nail Fin) *33*
Penetration, 3D *34*
Penetration, 2D *35*
Penetration Examples *36*

Horizontal Wall Installation Details

Base *38*
Sill *39*
Eave / Fascia *40*
Endwall *41*
Outside Corner *42*
Inside Corner *43*
Soffit, Front *44*
Soffit, Back *45*
Parapet *46*
Door / Window (Head) *47*
Opening, Head (Nail Fin) *48*
Door / Window (Jamb) *49*
Opening, Jamb (Nail Fin) *50*
Door / Window (Sill) *51*
Opening, Sill (Nail Fin) *52*
Penetration, 3D *53*
Penetration, 2D *54*
Penetration Examples *55*

GENERAL NOTES

The attached installation details are intended to be a design aid and do not depict all situations. Modifications are the responsibility of the designer/user and should consider climate conditions such as wind and snow, wildfire, governing code requirements, and the actual usage and maintenance of the structure.

Applications:

PBR is acceptable for use as a roofing panel and as a wall panel installed in the vertical or horizontal orientation. The recommended minimum slope is 1:12. PBR can be installed over solid substrates or over spaced supports. This installation guide depicts PBR installed over mixed substrates. It is the responsibility of the designer/user to make proper installation adjustments to address the installation conditions on the project.

Flashings:

Where feasible, flashings should be lapped away from prevailing winds. Certain flashings should be supported if it is likely that equipment (ladder, etc.) will be used against them. Check with AEP Span any time you intend to specify a prefinished flashing in a gauge or finish different than the PBR panels. It is good practice to specify that all flashings be of the same material (gauge, color, finish) as the roof & wall panels to ensure long-term durability. Painted flashings rarely equal the durability and colorfastness of factory baked-on paint systems. The enclosed details have minimized the use of exposed fasteners where possible. The edges of flashings have also been shown hemmed to strengthen and to minimize the exposure of cut edges.

Flashing design and fabrication is generally the responsibility of the contractor. For convenience, we have provided typical flashing drawings on our website. Applicable PBR flashing part numbers are referenced within this installation guide. Note that flashing shapes and dimensions may vary greatly based on project requirements. Installation details and flashings referenced within are for general design guidance only.

Condensation, Insulation, & Ventilation:

It is the designer's responsibility to determine the need and composition of moisture control materials including insulation and vapor retarders, as well as ventilation requirements. Metal roof and wall products are susceptible to condensation, and its control should be carefully considered.

For metal roofing panels, an underlayment should be installed over the roof substrate. AEP Span recommends using AEP Span Underlayment HT, which is specifically engineered for all AEP Span roofing systems and suitable for use under any metal roofing system or coping. AEP Span Underlayment HT is a high-temperature, self-healing, self-adhering, peel-and-stick underlayment with a non-abrasive surface that will not mar, scratch, or abrade the underside of metal panels and flashings. Please note that additional protection may be required to achieve Class A fire ratings as defined in UL 790 classified assemblies.

Thermal Movement:

Both panels and flashings must allow for thermal movement (expansion and contraction) of the materials, especially where long lengths are used. Appropriate gaps or provisions must be provided to accommodate thermal movement.

Designing for Snow:

If possible, valleys, gutters, roof elevation changes and penetrations should be minimized or eliminated in snow areas. Roof penetrations should be located as close to the ridge or peak of the roof as possible to minimize accumulations of ice and snow.

Building Code Compliance:

PBR is compliant with the IBC, IRC, CBC, and CRC building codes. Refer to IAPMO-UES Code Compliance Report #ER-0550 for further details. PBR is also approved as part of a Class A Fire rated assembly when installed in accordance to UL790 listings.

Panel Attachment / Structural Performance:

The structural performance of PBR is documented in IAPMO-UES Code Compliance Report #ER-0550. Published performance data includes: Panel section properties, inward (gravity) load capacities, outward (wind uplift) load capacities, shear tables, and other product information and limitations.

Oil Canning:

Flat metal surfaces often display waviness commonly referred to as 'oil canning'. This can be caused by variations in raw material, processing variations, product handling, or variations in the installation substrate. Oil canning is a characteristic, not a defect, of panels manufactured from light-gauge metal. To reduce potential for oil canning, substrates should not deviate from a flat plane more than 1/4 inch in 20 feet, or 1/8 inch in 5 feet. Oil canning is not a cause for panel rejection. Additional technical information is available for review on our website.

Protecting the Panels:

Proper handling, storage, installation, and keeping work surfaces clean are key to protecting metal roofing and siding. Regular washing and maintenance after installation further help ensure panel longevity. For detailed guidance, refer to the technical resources on AEP Span's website.

References:

The Sheet Metal and Air Conditioning Contractors' National Association Inc. (SMACNA) manual is an excellent reference for sheet metal contractors. It's guidelines for underlayments, gutter and downspout size requirements, and expansion/contraction of metals and flashing joints should be followed.

Technical Assistance:

Contact your AEP Span Sales Representative for additional information.

PBR Online Product Page:

Technical Resources:

ER-0550 Code Compliance Report:

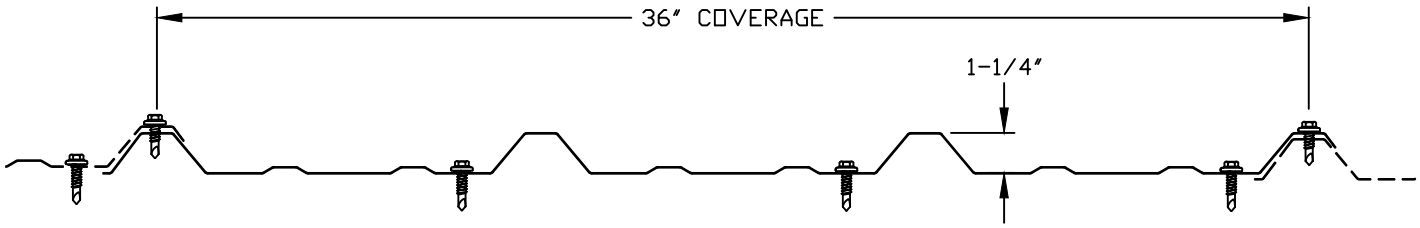

PBR PANEL

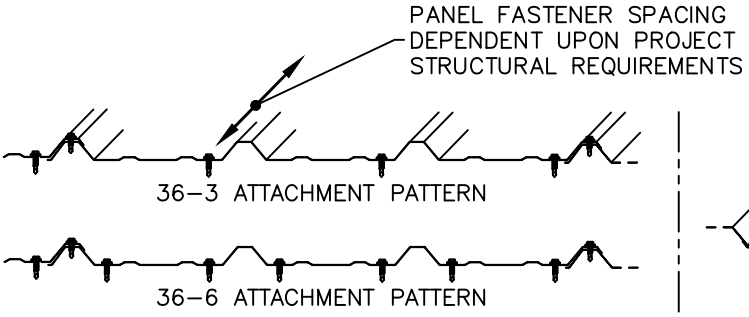

PBR
(ROOF & WALL)

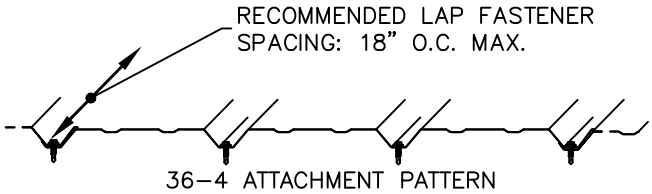

REVERSED PBR
(FOR WALL INSTALL ONLY)

NOTE: PANEL FASTENER ATTACHMENT (TYPE, SIZE, AND LOCATION) IS DEPENDENT UPON SUBSTRATE USAGE AND STRUCTURAL REQUIREMENTS FOR EACH SPECIFIC PROJECT. DESIGN PROFESSIONAL TO DESIGN OR CONFIRM ADEQUATE PANEL ATTACHMENT. REFER TO GENERAL NOTES SECTION FOR ADDITIONAL GUIDANCE.

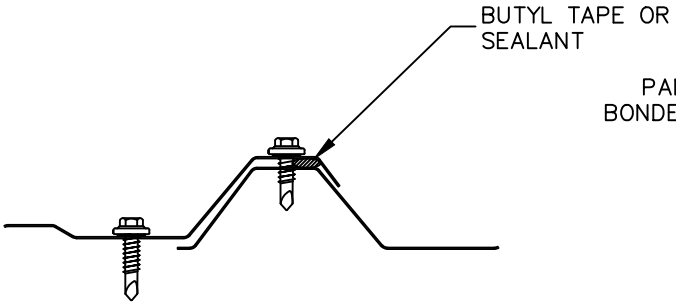

PBR PANEL
FASTENER INSTALLATION

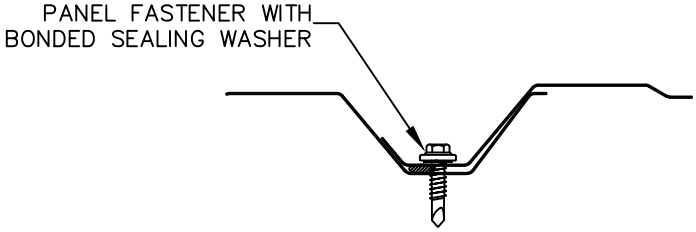

REVERSED PBR PANEL
FASTENER INSTALLATION

AEP SPAN	PBR PANEL	PANEL DETAILS
		index PBR-01

REV. 09/22/26

Description		Length(s)	Use
	#9 Hex Head Wood Screw (1/4" Drive) with Sealing Washer	1", 1-1/2" 2", 2-1/2" 3"	Panel to dimensional lumber attachments. Color matched.
	#14 Hex Head Wood Screw (5/16" Drive) with Sealing Washer	1" 1-1/2"	Panel to plywood/OSB attachments (7/16" minimum thickness). Color matched.
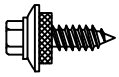	#12 Stitch Screw (1/4" Hex Drive) with Sealing Washer	3/4"	Exposed trim and panel lap attachments. Visible head size matches Item #1 wood screw. Color matched.
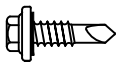	#14 Lap Self Driller (5/16" Hex Drive) with Sealing Washer	7/8"	Exposed trim and panel lap attachments. Visible head size matches Item #2 wood screw. Color matched.
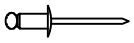	1/8" Diameter Stainless Steel Rivet	1/8" Max Grip Length	Trim to trim, or trim to panel attachments. Color matched.
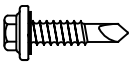	#12 Hex Head Self Drill Screw (1/4" Drive)	1", 1-1/2" 2", 2-1/2"	Panel to steel deck or steel framing attachment. Color matched.
	#10 Pan Head Screw	1"	For non-exposed trim to substrate attachments.

Notes:

- The table above shows the fasteners commonly required for AEP Span panel installations. Refer to the enclosed installation details for further guidance.
- Panel attachment screws into plywood/OSB must be long enough to fully penetrate through at least 3/8", or penetrate into solid lumber by at least one inch.
- Exposed fasteners must have sealing washers and should be the same color as the panels and trims they attach.
- Screws must be properly driven to ensure proper seal and holding strength. Do not underdrive or overdrive the screws.
- Note that rivets are not considered watertight.

Proper Installation of Fasteners with Sealing Washers

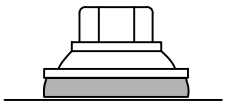

Correctly Driven

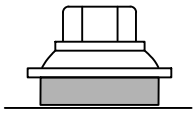

Under Driven

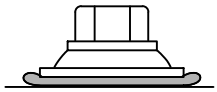

Over Driven

AEP SPAN

PBR PANEL

FASTENERS

index

PBR-02

REV. 12/9/25

ROOF DETAILS

AEP SPAN

PBR PANEL

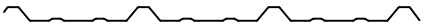

index

PBR-03

REV. 12/9/25

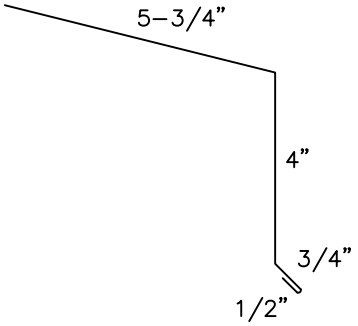

EAVE (E6)

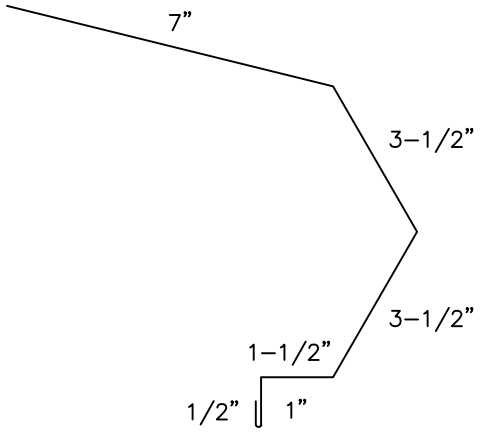

SCULPTURED EAVE (E7)

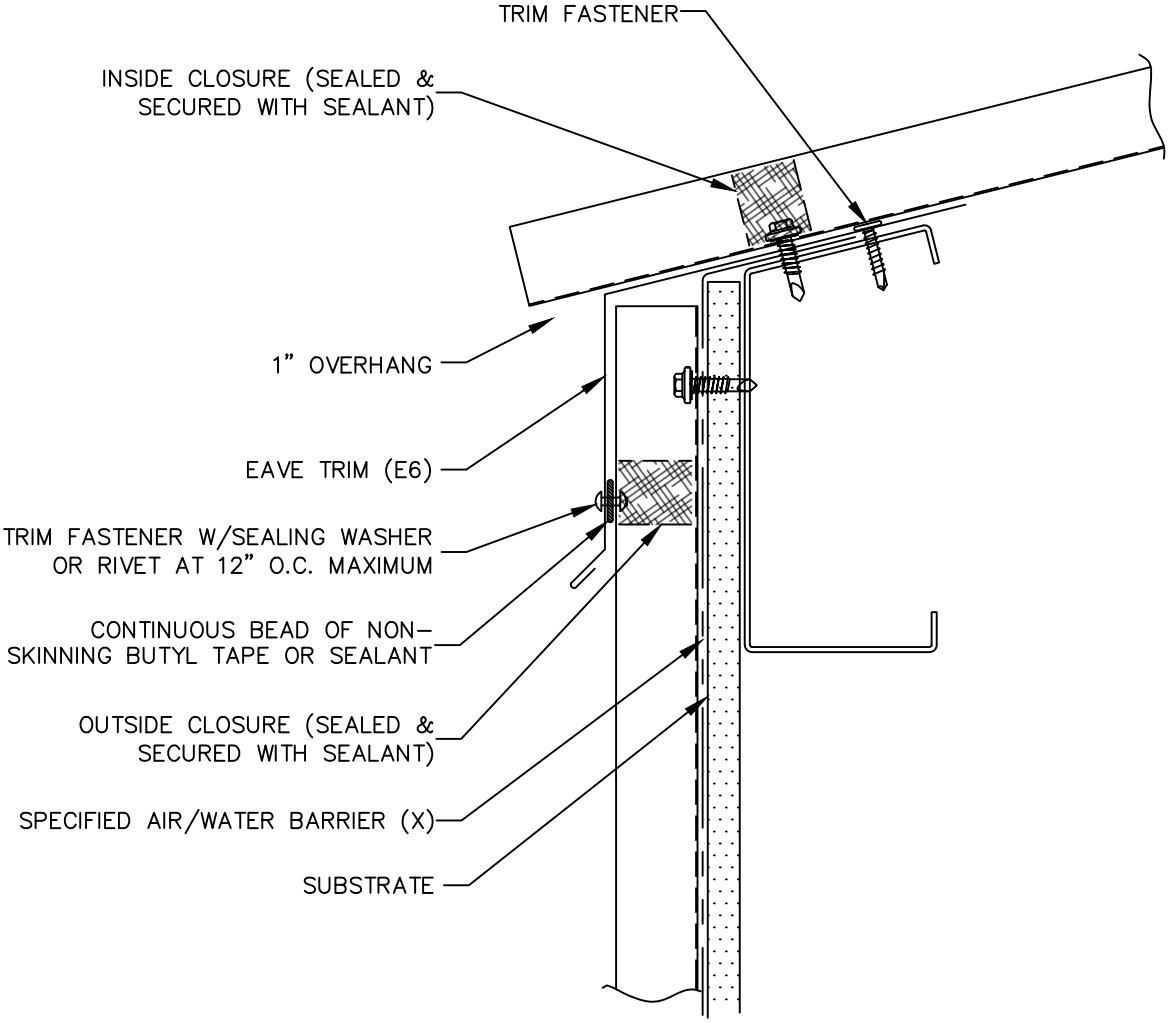

(X) – NOT BY AEP SPAN

AEP SPAN

PBR PANEL

EAVE

index

PBR-04

REV. 12/9/25

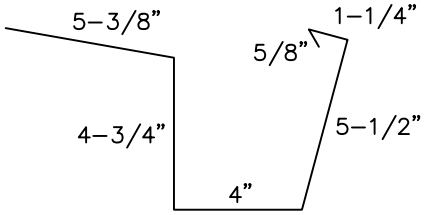

GUTTER, PRE–HUNG (GU6)

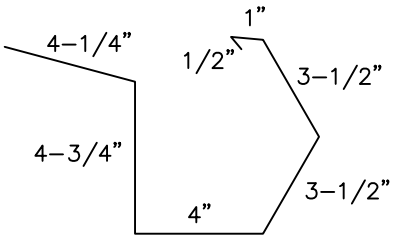

SCULPTURED GUTTER, PRE–HUNG (GU7)

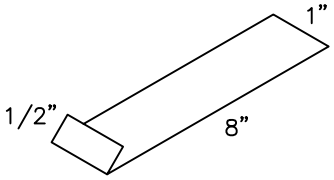

GUTTER STRAP (GS6)

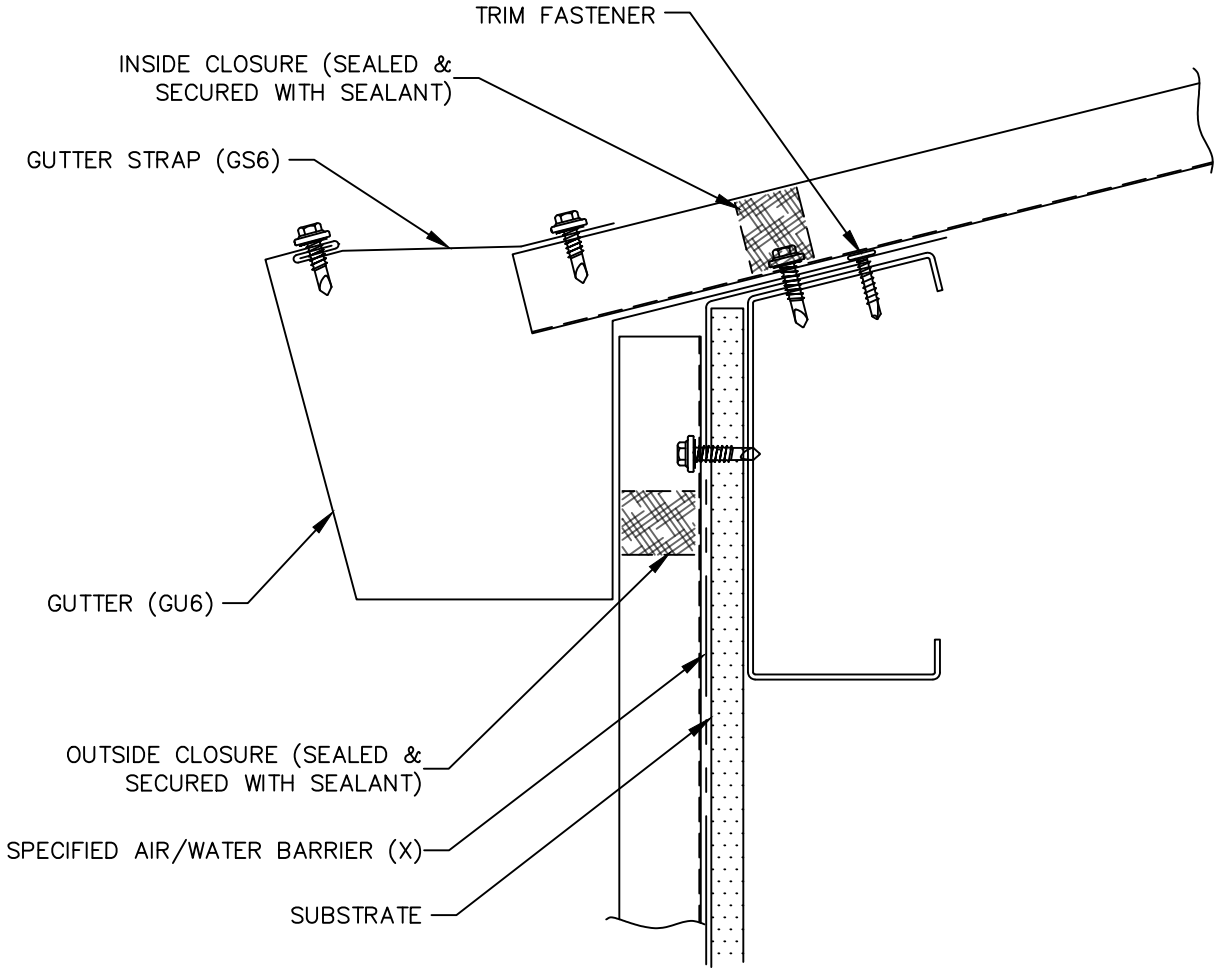

(X) – NOT BY AEP SPAN

AEP SPAN

PBR PANEL

EAVE W/ GUTTER (PRE-HUNG)

index

PBR-05

REV. 12/9/25

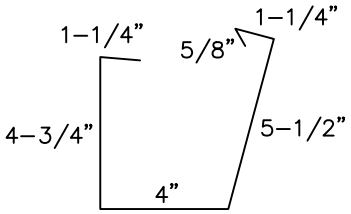

GUTTER, POST–HUNG (GU8)

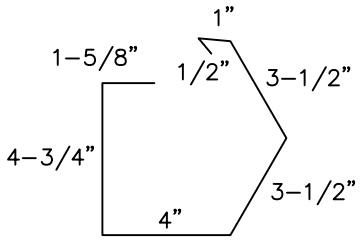

SCULPTURED GUTTER, POST–HUNG (GU9)

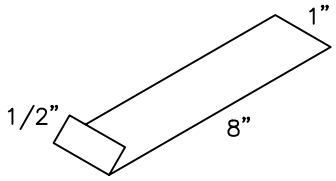

GUTTER STRAP (GS6)

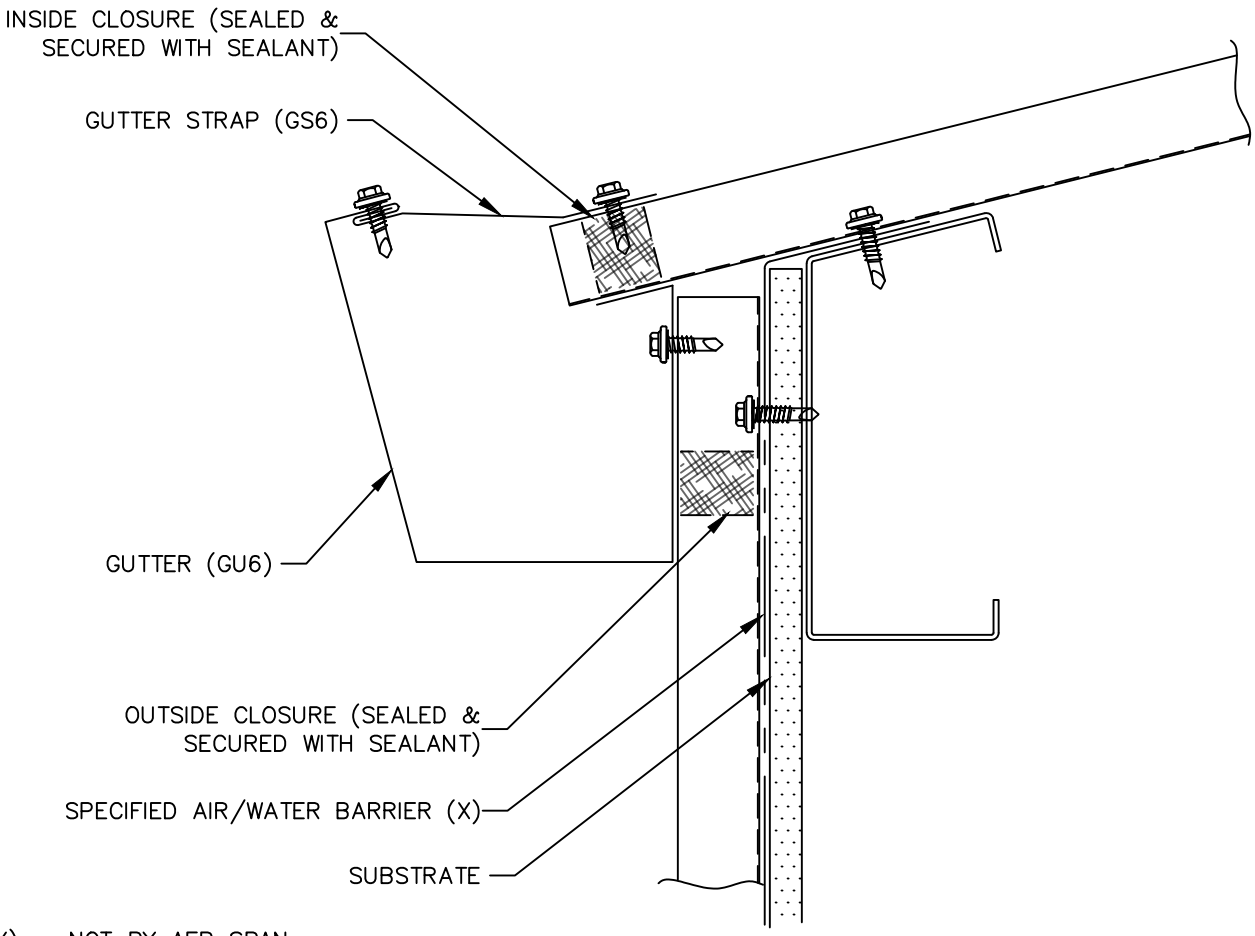

(X) – NOT BY AEP SPAN

AEP SPAN

PBR PANEL

EAVE W/ GUTTER (POST-HUNG)

index

PBR-06

REV. 12/9/25

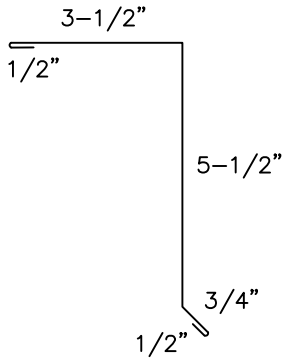

GABLE TRIM (G12)

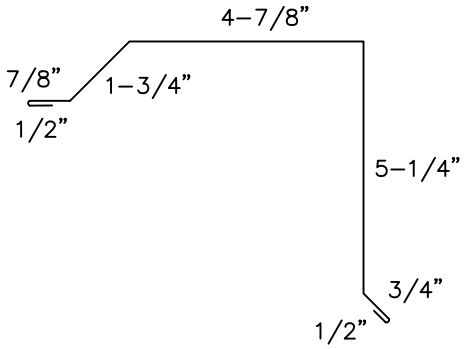

ALTERNATE GABLE (G8)

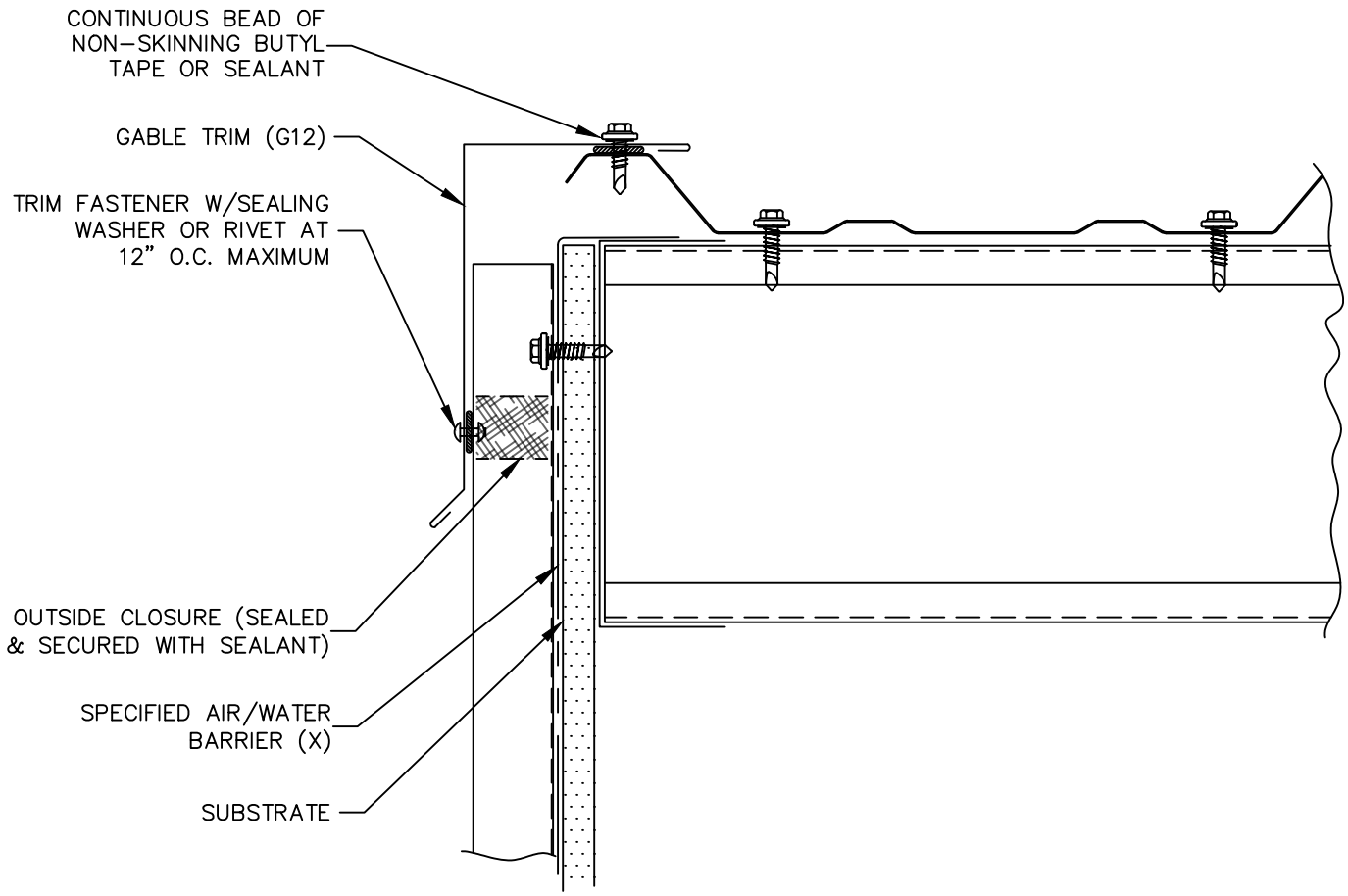

(X) – NOT BY AEP SPAN

AEP SPAN

PBR PANEL

GABLE

index

PBR-07

REV. 12/9/25

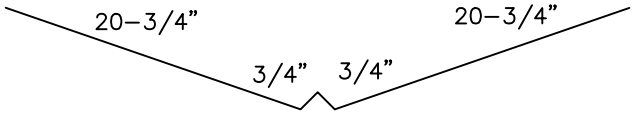

VALLEY (V6)

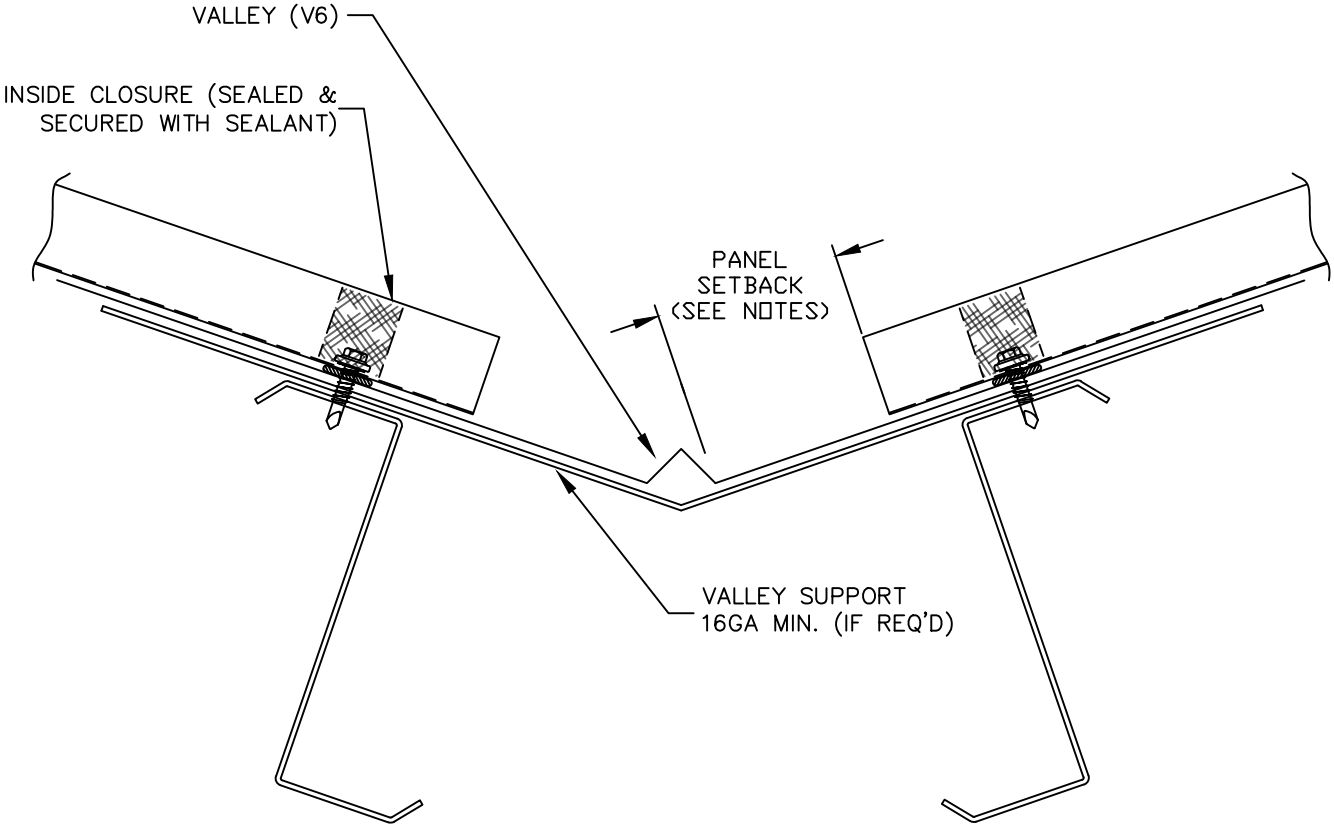

NOTES:
– PANEL SETBACK 8" MIN FROM VALLEY CENTERLINE. PROJECT CONDITIONS (SLOPE, ICE, EXCESSIVE SNOW OR RAIN) MAY REQUIRE LARGER SETBACK. CONSULT DESIGN PROFESSIONAL AS NEEDED FOR ASSISTANCE.
– VALLEY MUST BE THE PROPER WIDTH TO ACCOUNT FOR SLOPE, SNOW, ICE AND HEAVY RAIN CONDITIONS.
– A RUBBERIZED COLD–APPLIED MEMBRANE IS RECOMMENDED, EXTENDING A MINIMUM OF 3'–0" UP FROM THE CENTER OF THE VALLEY ON EACH SIDE.
– BE ADVISED THAT ROOF VALLEYS INSTALLED IN REGIONS OF WILDFIRE RISK MAY REQUIRE AN ALTERNATE CONSTRUCTION TO MEET CODE REQUIREMENTS.

AEP SPAN

PBR PANEL

VALLEY

index

PBR-08

REV. 12/9/25

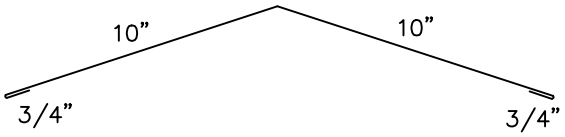

RIDGE/HIP (R8)

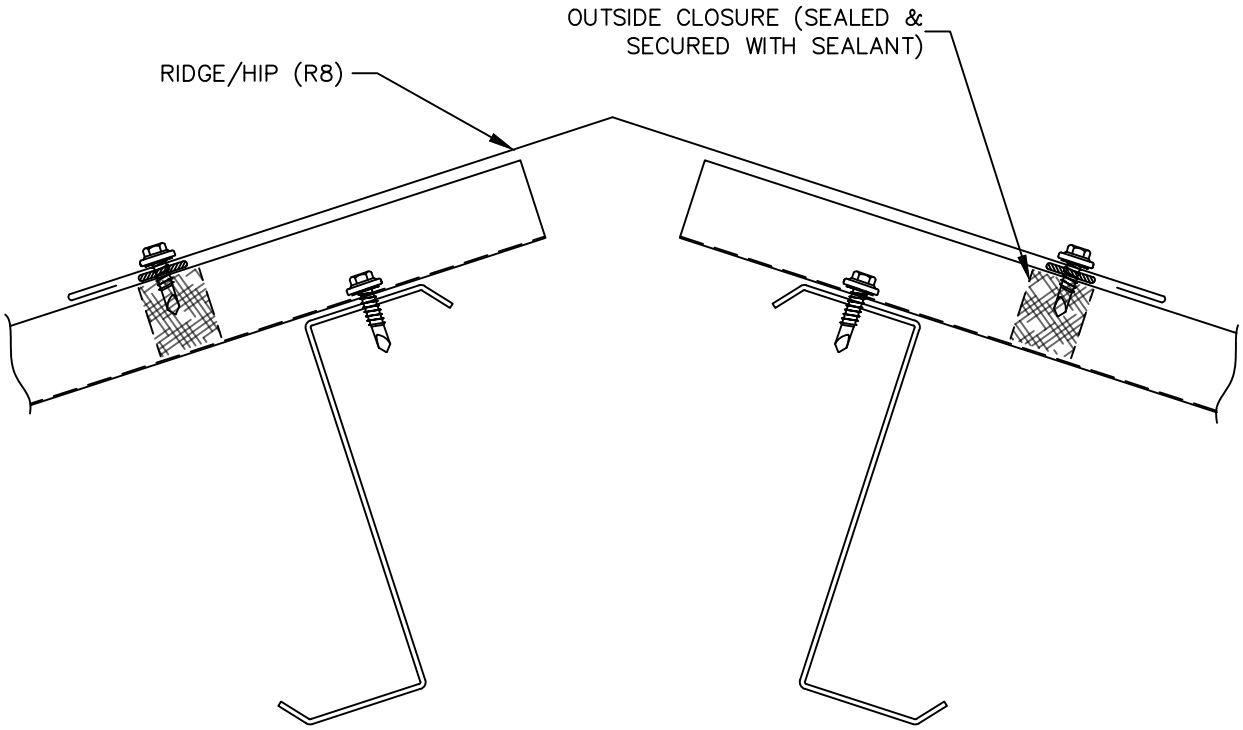

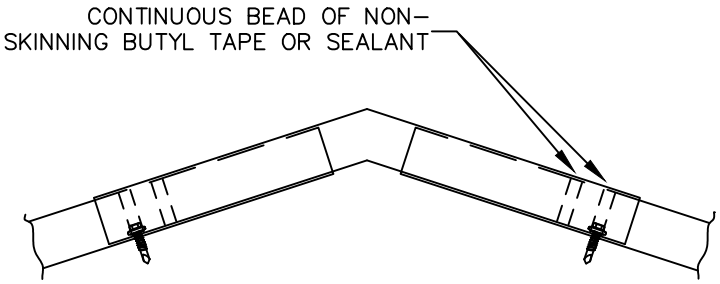

DETAIL WITH FORMED RIDGE CAP

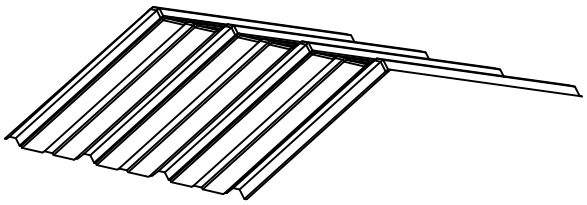

PBR FORMED RIDGE (R7)

AEP SPAN

PBR PANEL

RIDGE

index

PBR-09

REV. 12/9/25

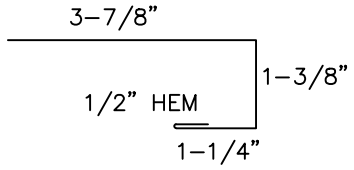

C-METAL (C6)

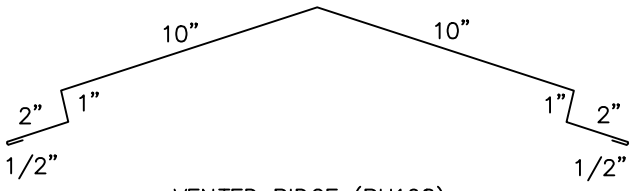

VENTED RIDGE (RH168)

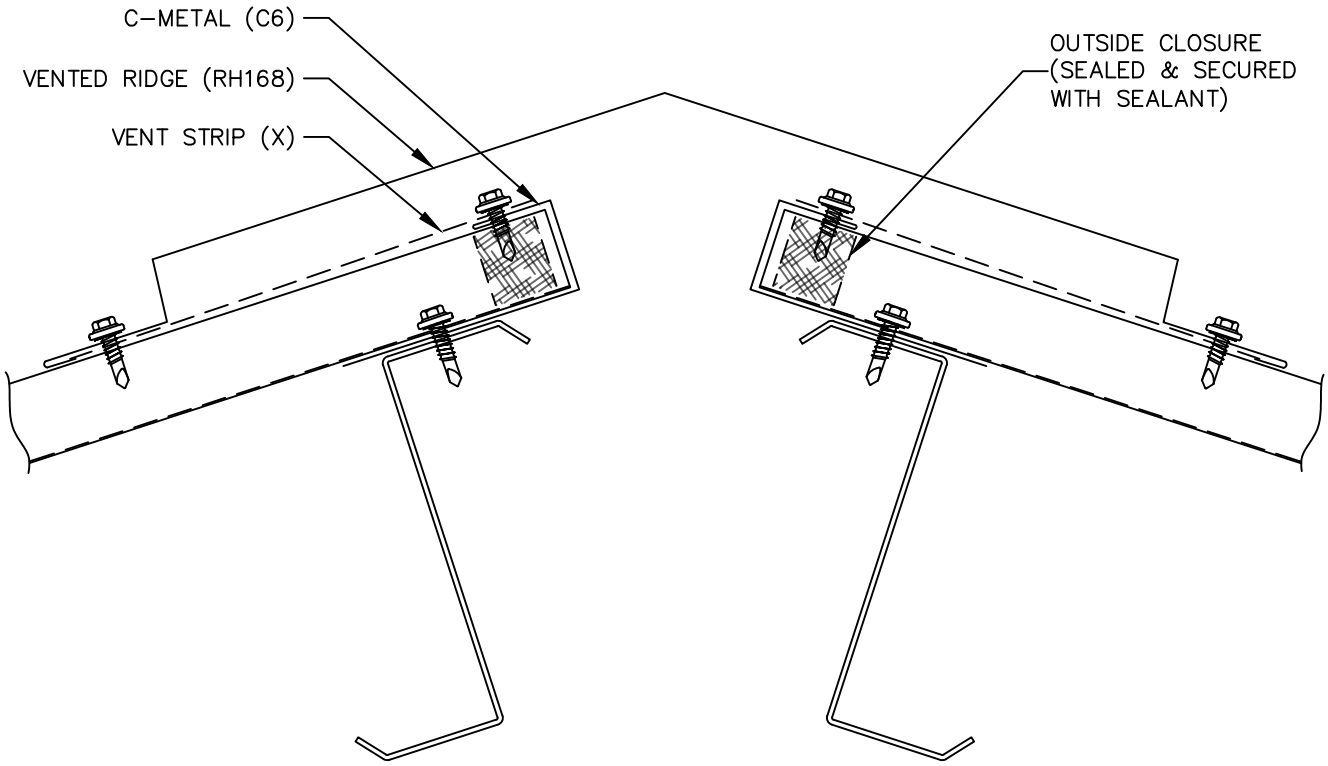

NOTE:
– THIS DETAIL MEETS IWUIC AND CALIFORNIA CBC CHAPTER 7A FIRE CODE REQUIREMENTS IF: VENT MATERIAL IS NON-COMBUSTIBLE METAL, HAS A CORROSION RESISTANT FINISH (GALVANIZED, OR SIMILAR), AND HAS VENT HOLES BETWEEN 1/16" AND 1/8" IN DIAMETER.

(X) – NOT BY AEP SPAN

AEP SPAN

PBR PANEL

VENTED RIDGE

index

PBR-10

REV. 12/9/25

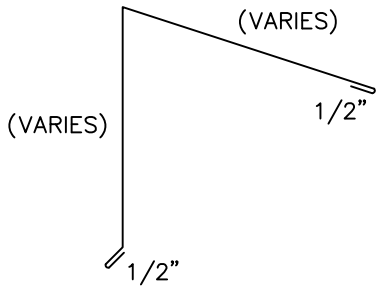

PEAK (PF16)

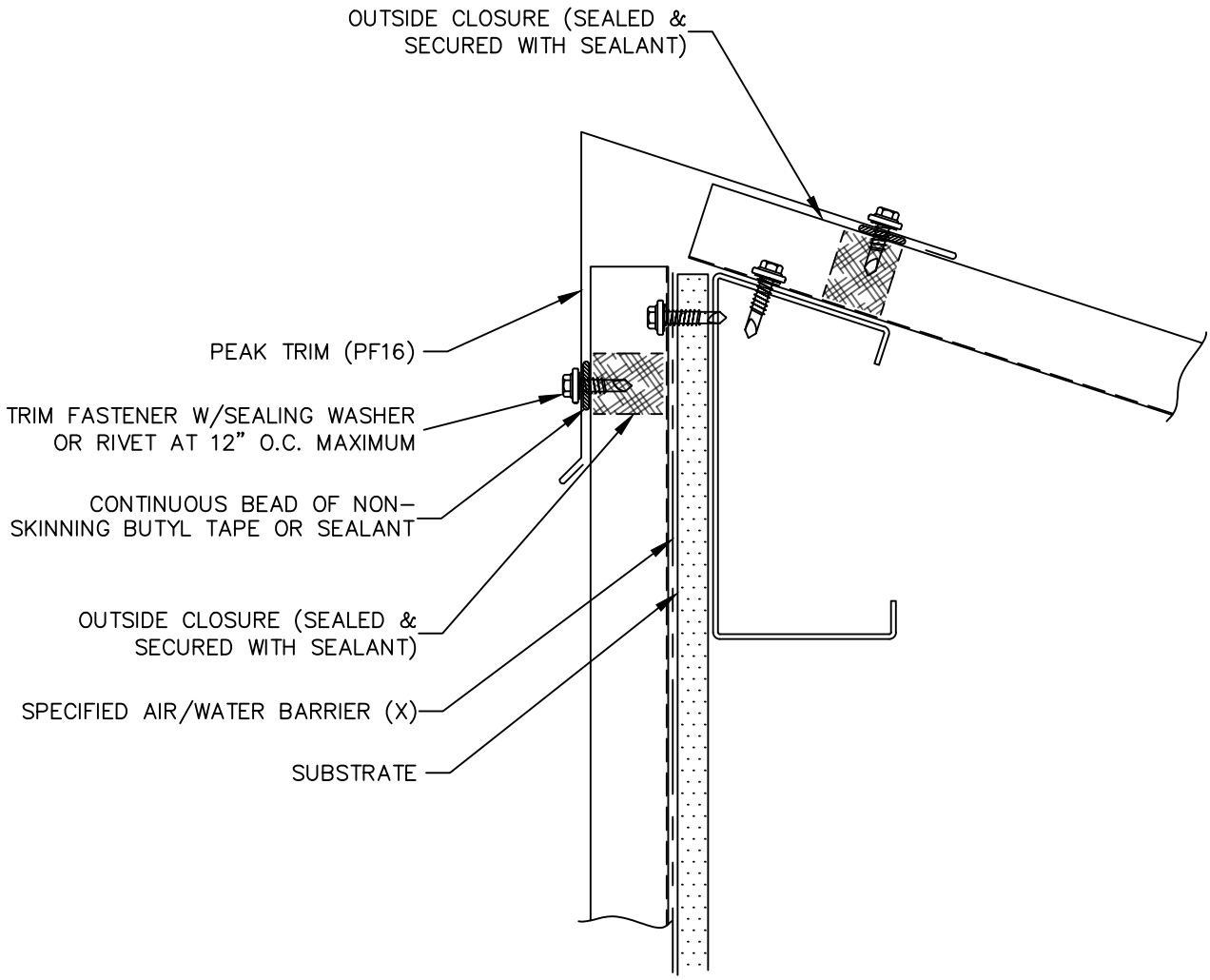

(X) – NOT BY AEP SPAN

AEP SPAN

PBR PANEL

PEAK

index

PBR-11

REV. 12/9/25

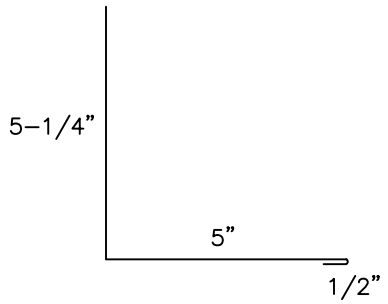

SIDEWALL (SW8)

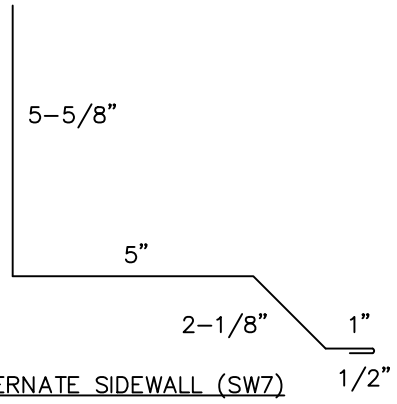

ALTERNATE SIDEWALL (SW7)

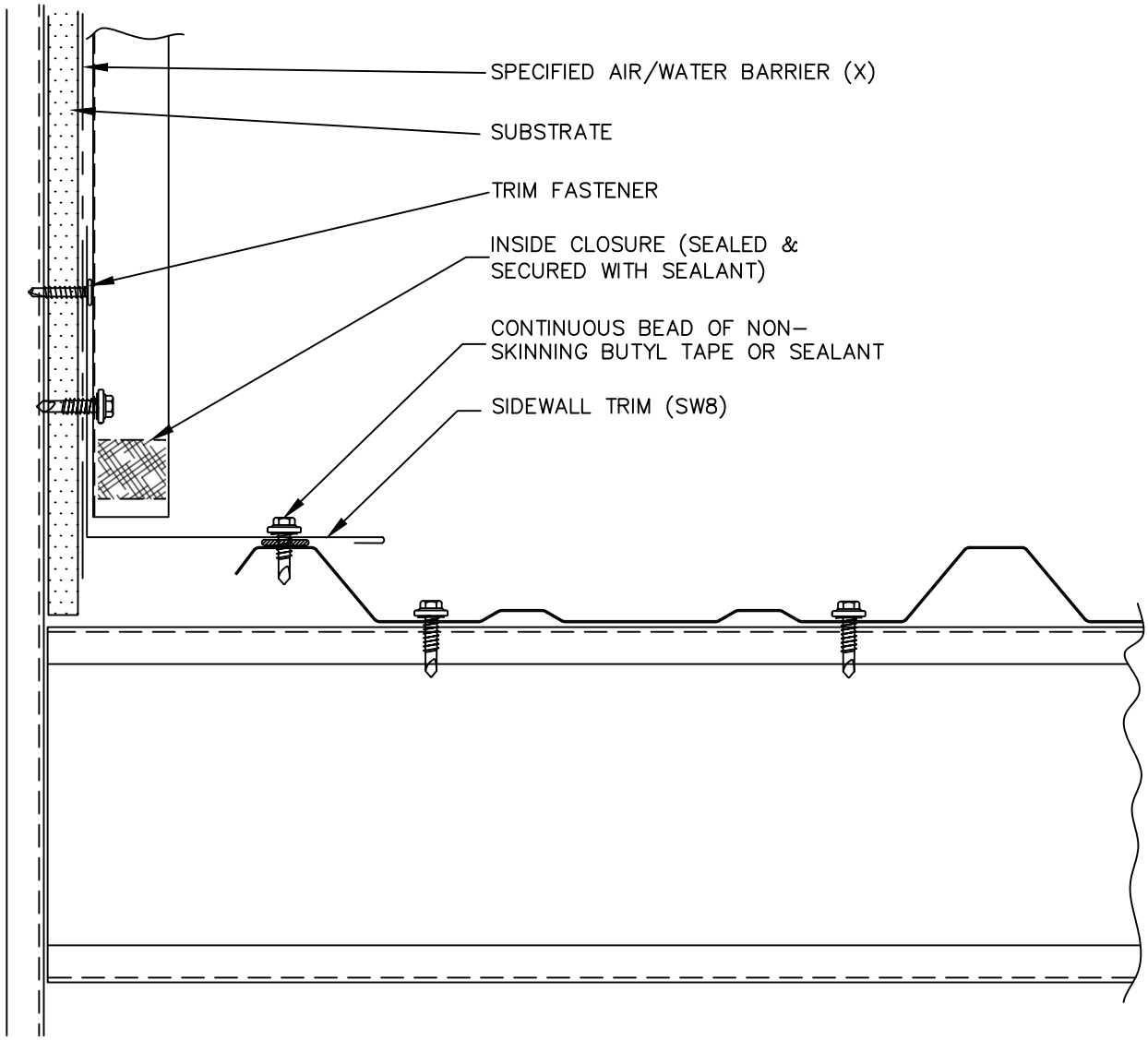

(X) – NOT BY AEP SPAN

AEP SPAN

PBR PANEL

SIDEWALL

index

PBR-12

REV. 12/9/25

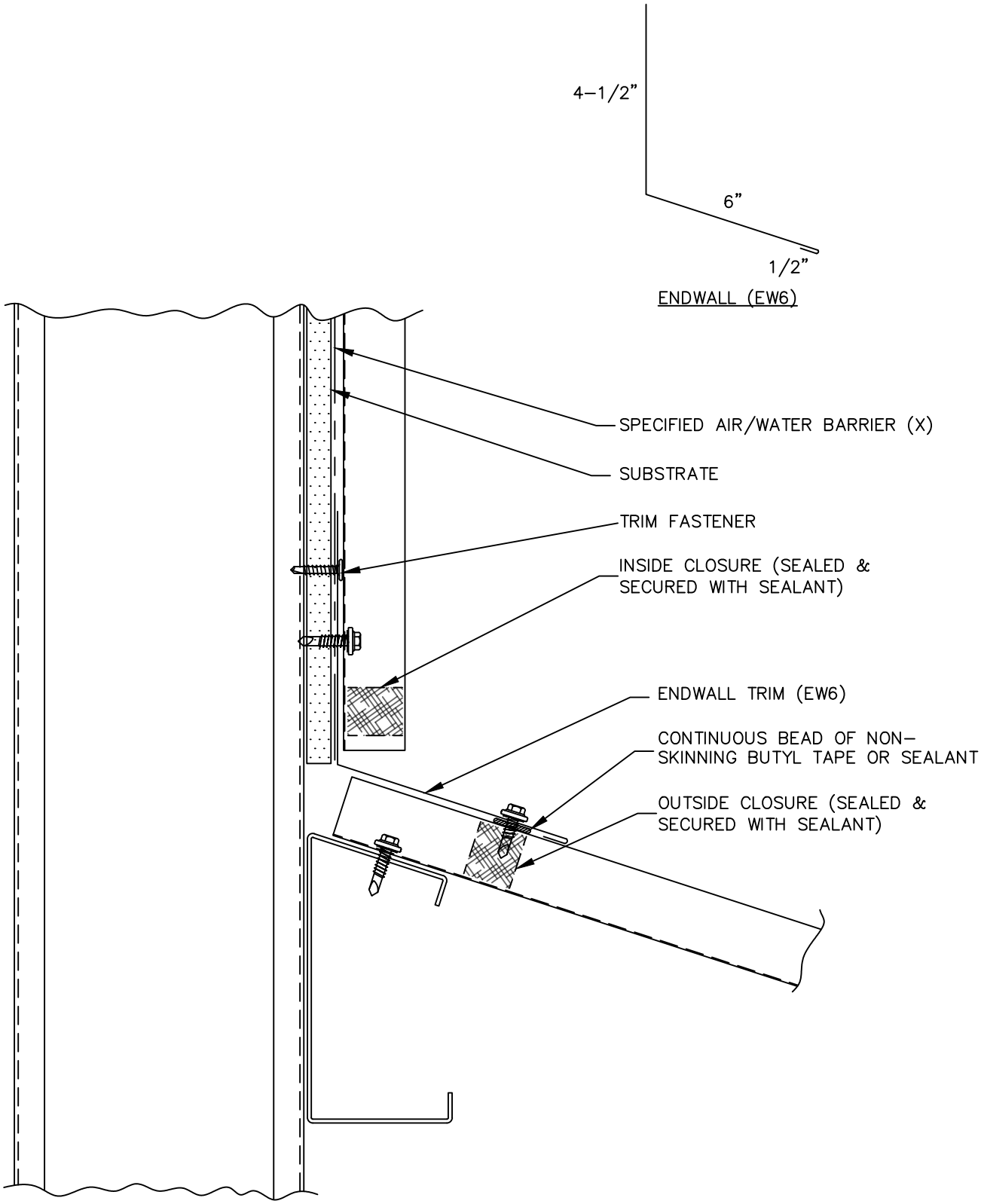

(X) – NOT BY AEP SPAN

AEP SPAN

PBR PANEL

ENDWALL

index

PBR-13

REV. 12/9/25

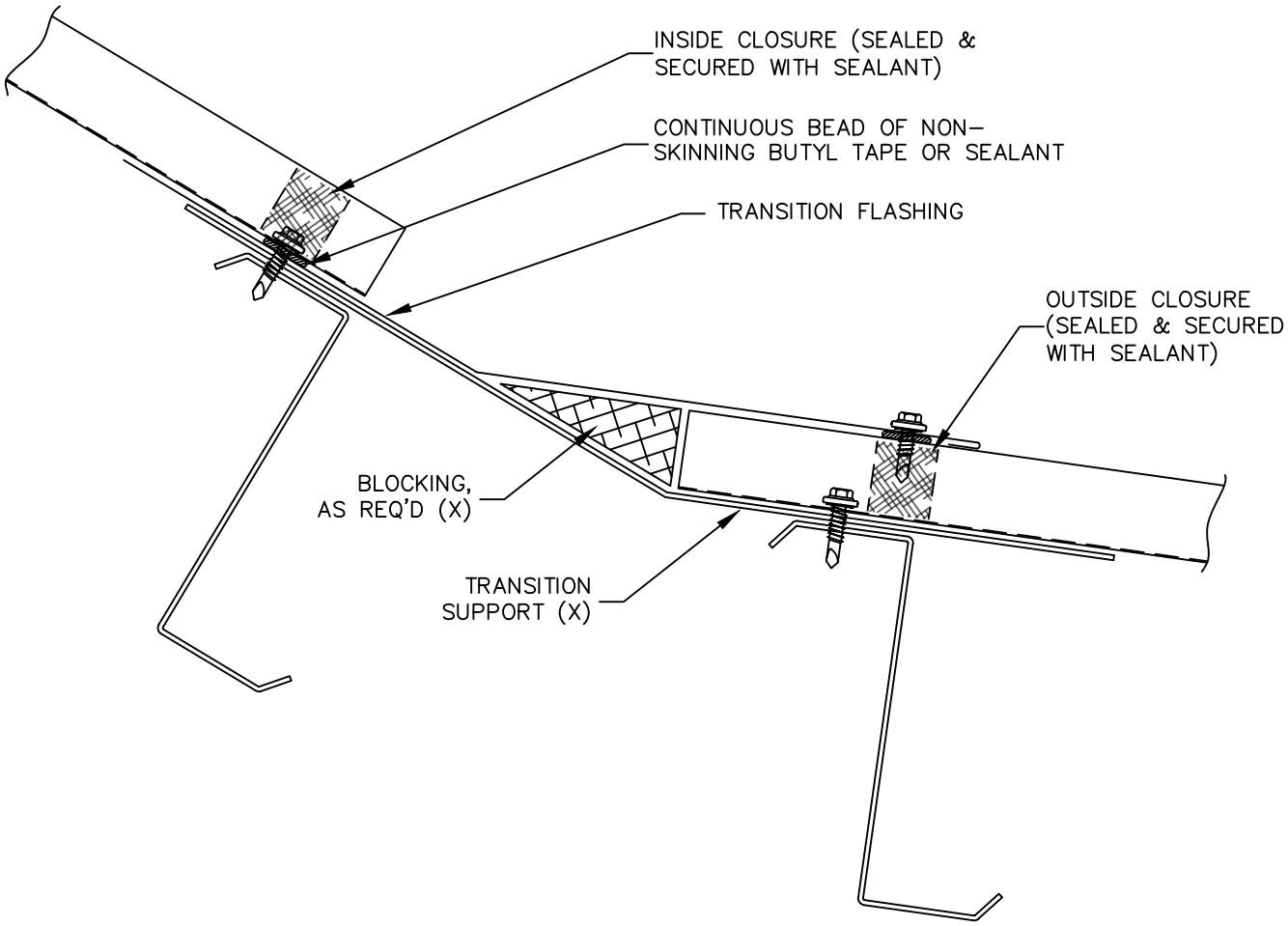

(X) – NOT BY AEP SPAN

AEP SPAN

PBR PANEL

HI-LO TRANSITION

index

PBR-14

REV. 12/9/25

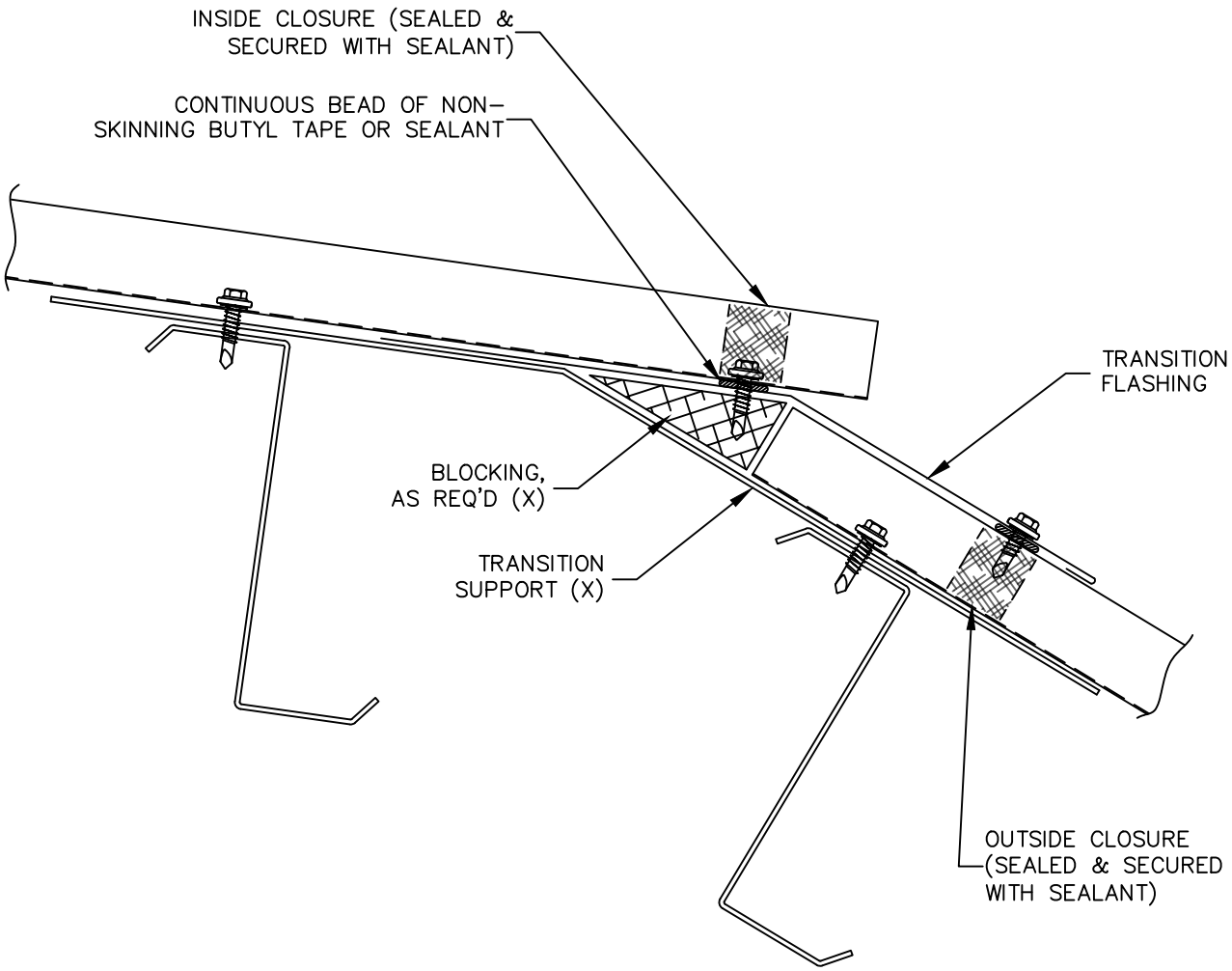

(X) – NOT BY AEP SPAN

AEP SPAN

PBR PANEL

LO-HI TRANSITION

index

PBR-15

REV. 12/9/25

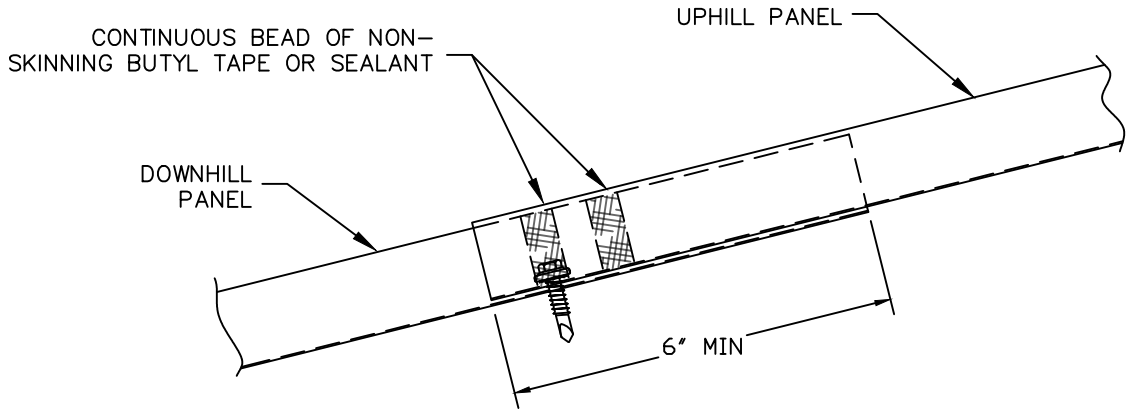

AEP SPAN

PBR PANEL

PANEL LAP

index

PBR-16

REV. 12/9/25

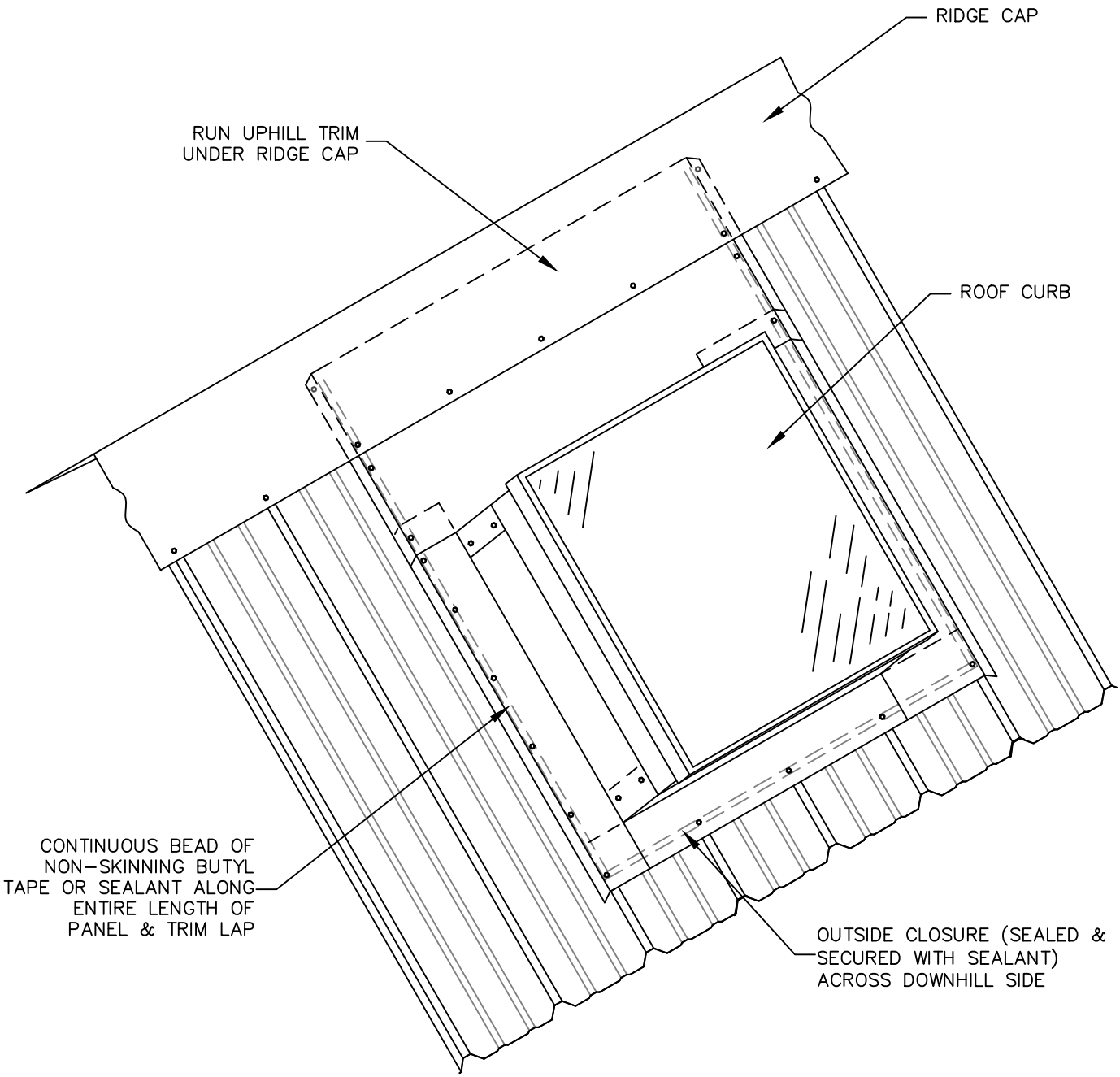

SEE FOLLOWING PAGE FOR
EXPLODED VIEW.

AEP SPAN

PBR PANEL

ROOF CURB

index

PBR-17

REV. 12/9/25

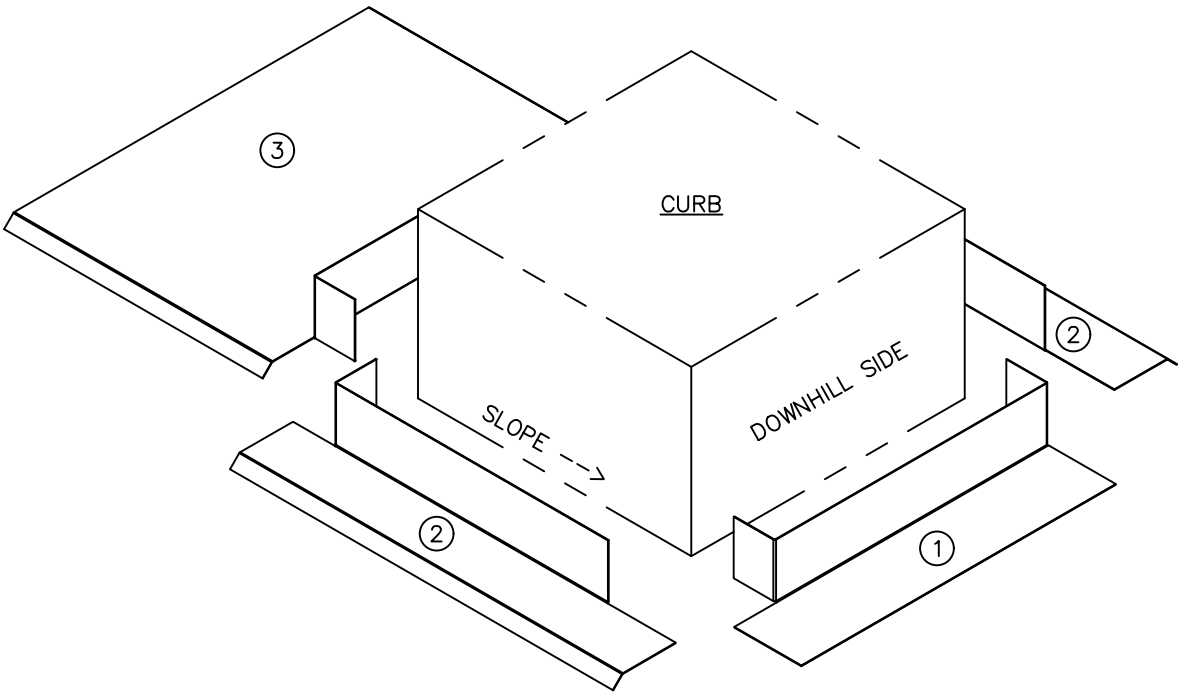

INSTALL CURB TRIMS IN ORDER SHOWN:

1) BOTTOM TRIM
2) CURB SIDE TRIMS
3) TOP TRIM

OVERLAP TRIMS IN SHINGLED MANNER WITH CONTINUOUS BEADS OF SEALANT AT ALL LAPS.

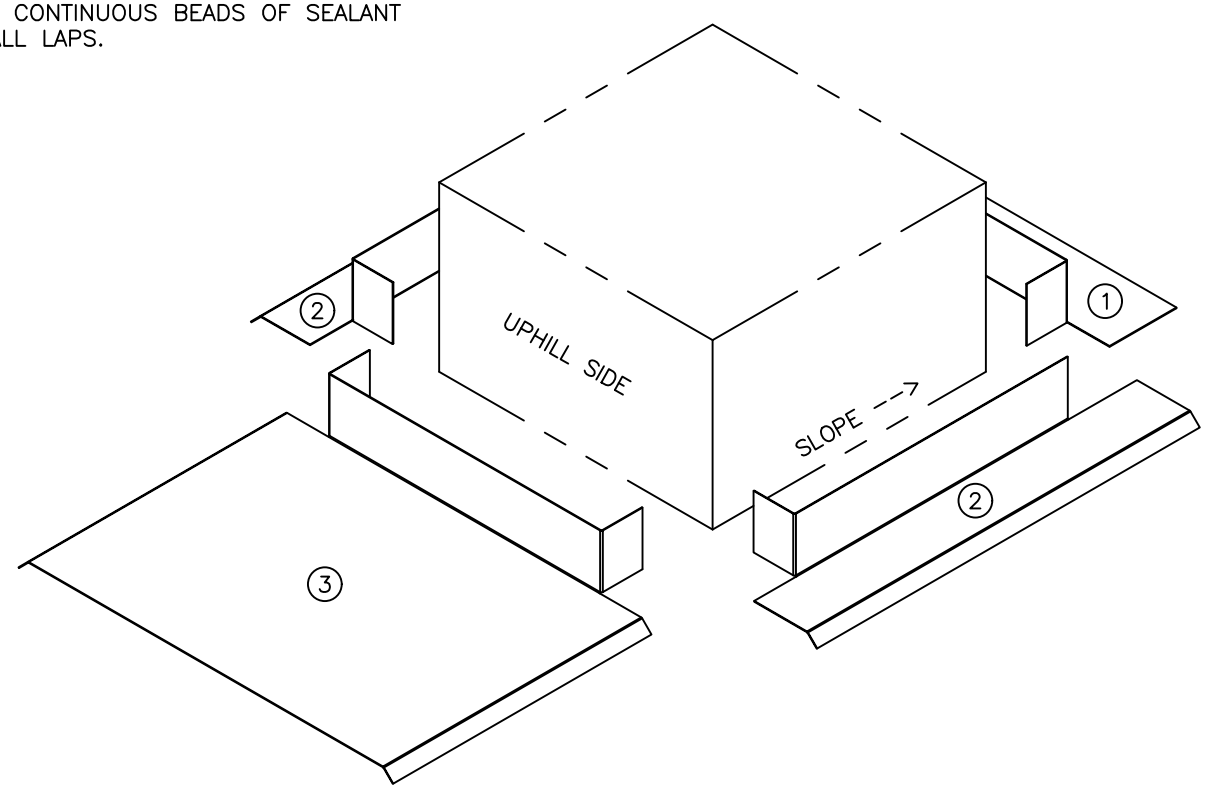

AEP SPAN

PBR PANEL

CURB FLASHINGS

index

PBR-18

REV. 12/9/25

VERTICAL WALL DETAILS

AEP SPAN

PBR PANEL

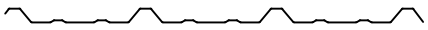

index

PBR-19

REV. 12/9/25

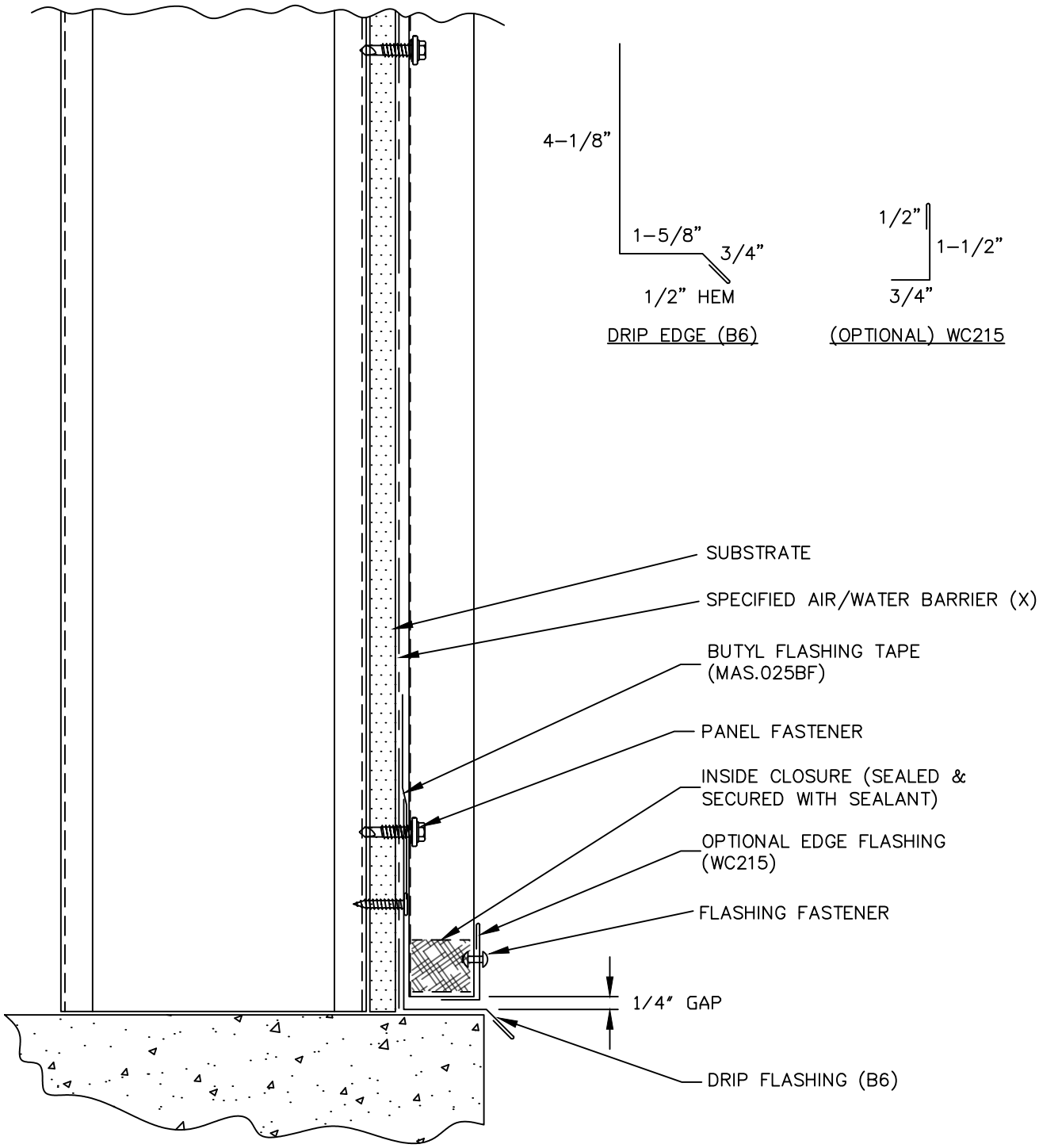

(X) – NOT BY AEP SPAN

AEP SPAN

PBR PANEL

BASE

index

PBR-20

REV. 12/9/25

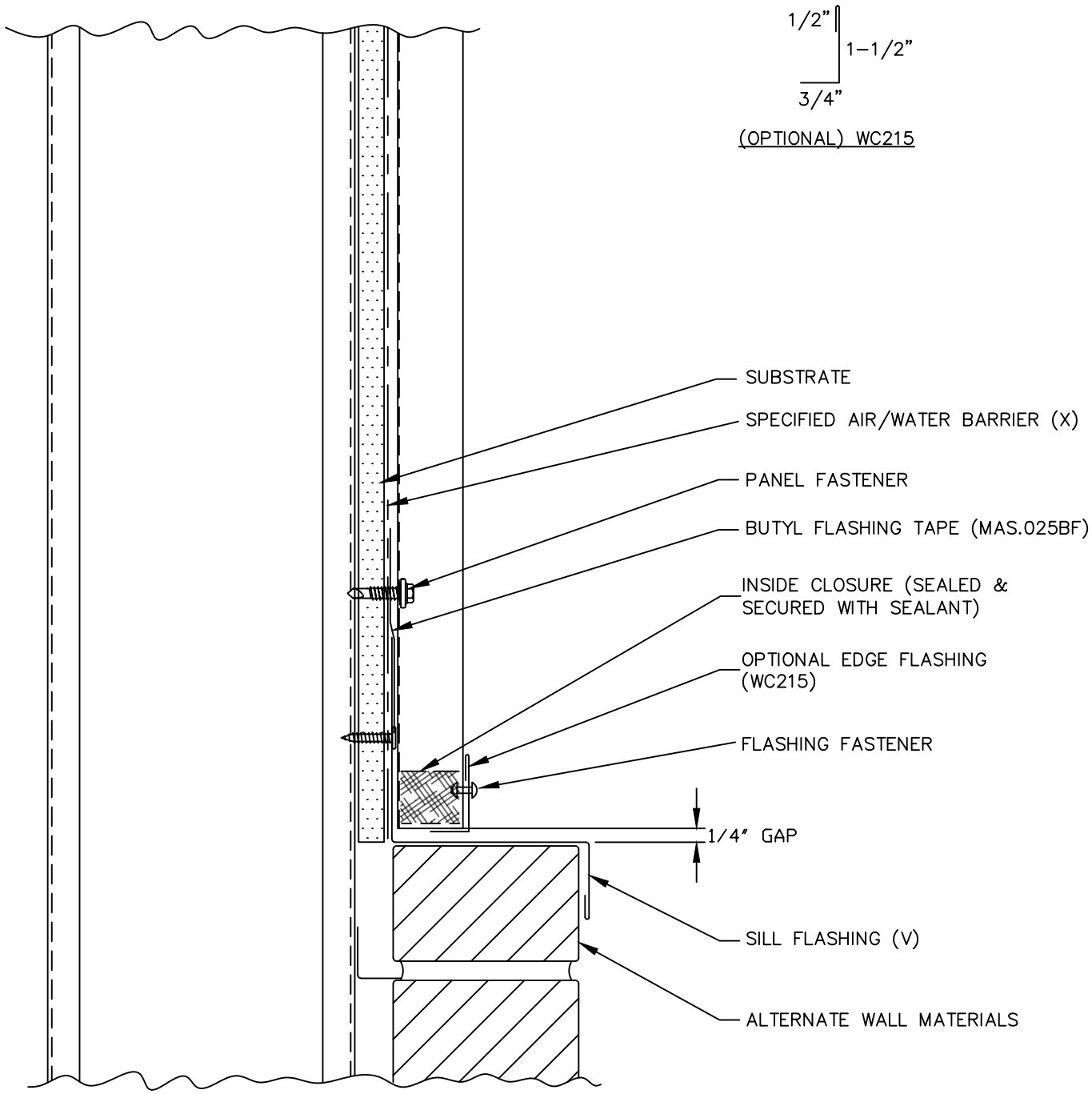

(X) – NOT BY AEP SPAN
(V) – DIMENSIONS VARY BASED ON PROJECT CONDITIONS

AEP SPAN

PBR PANEL

SILL

index

PBR-21

REV. 12/9/25

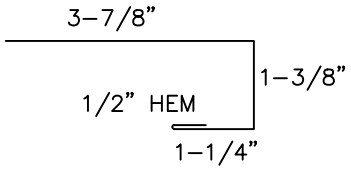

C–METAL (C6)

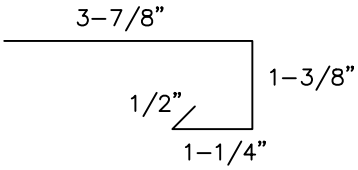

JAMB TRIM (J6)

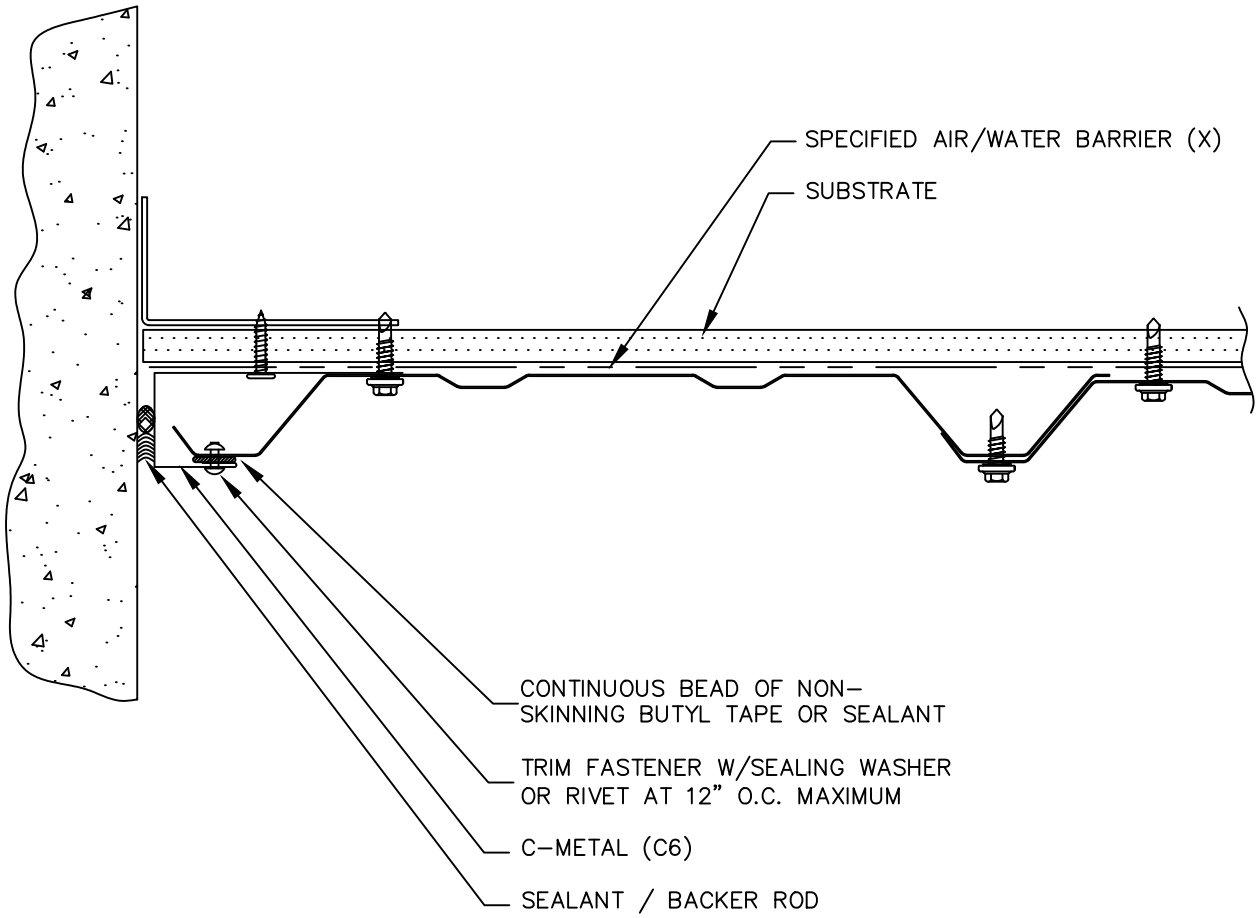

(X) – NOT BY AEP SPAN

AEP SPAN

PBR PANEL

END WALL

index

PBR-22

REV. 12/9/25

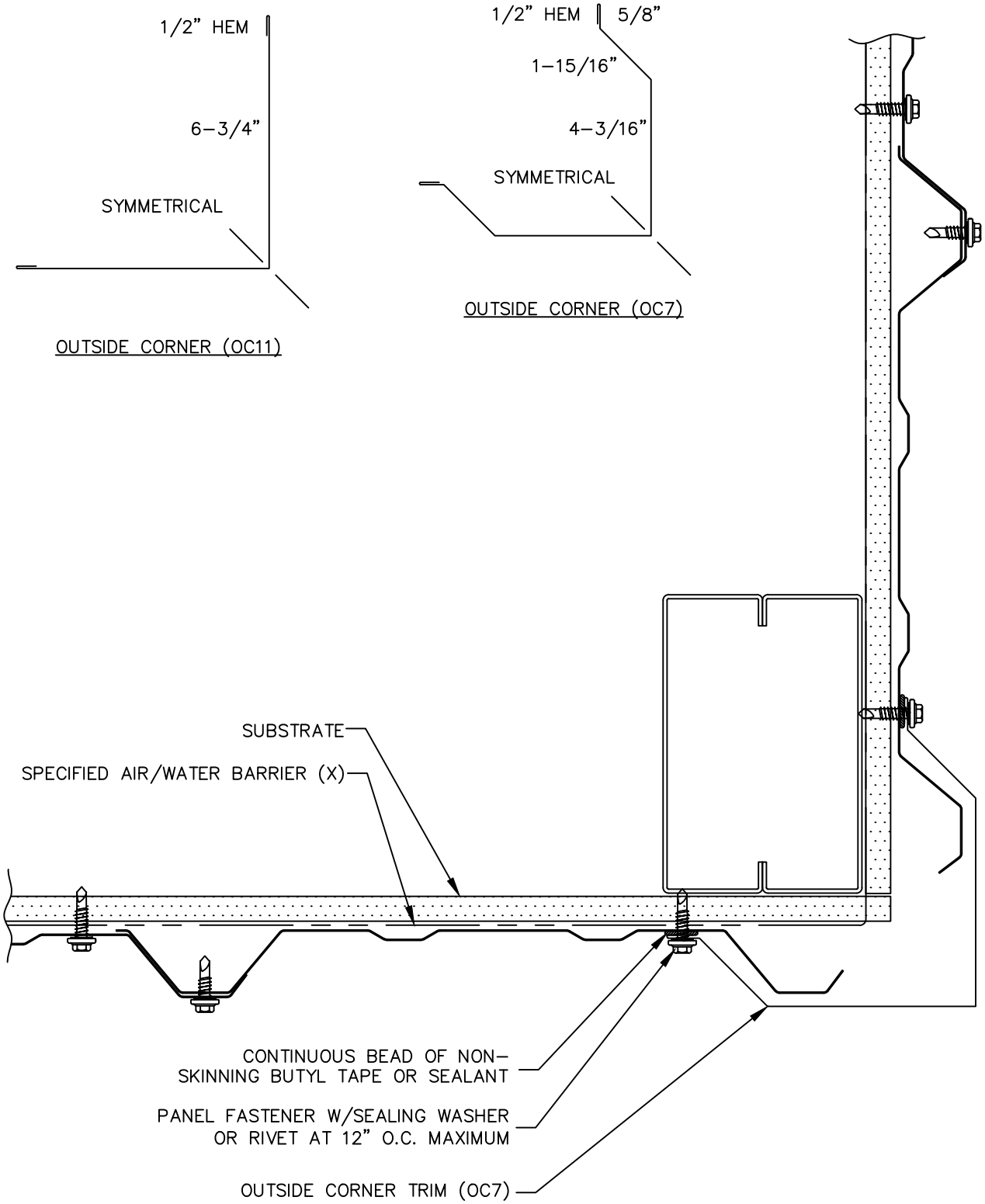

(X) – NOT BY AEP SPAN

AEP SPAN

PBR PANEL

OUTSIDE CORNER

index

PBR-23

REV. 12/9/25

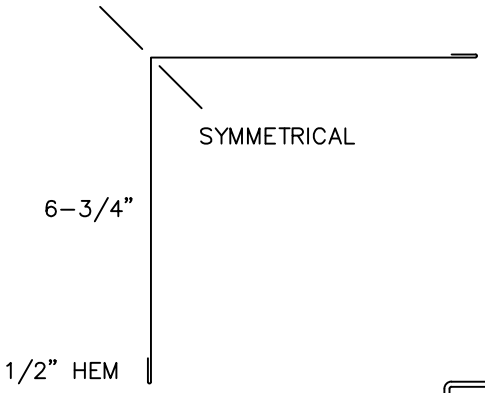

INSIDE CORNER (IC11)

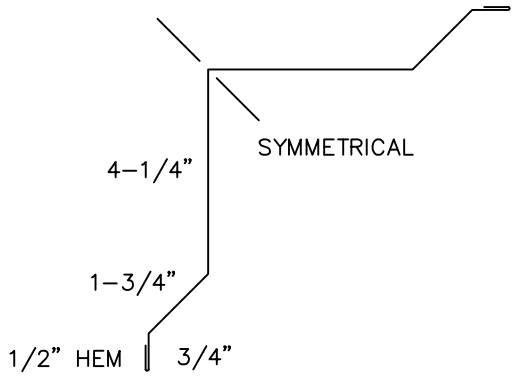

INSIDE CORNER (IC7)

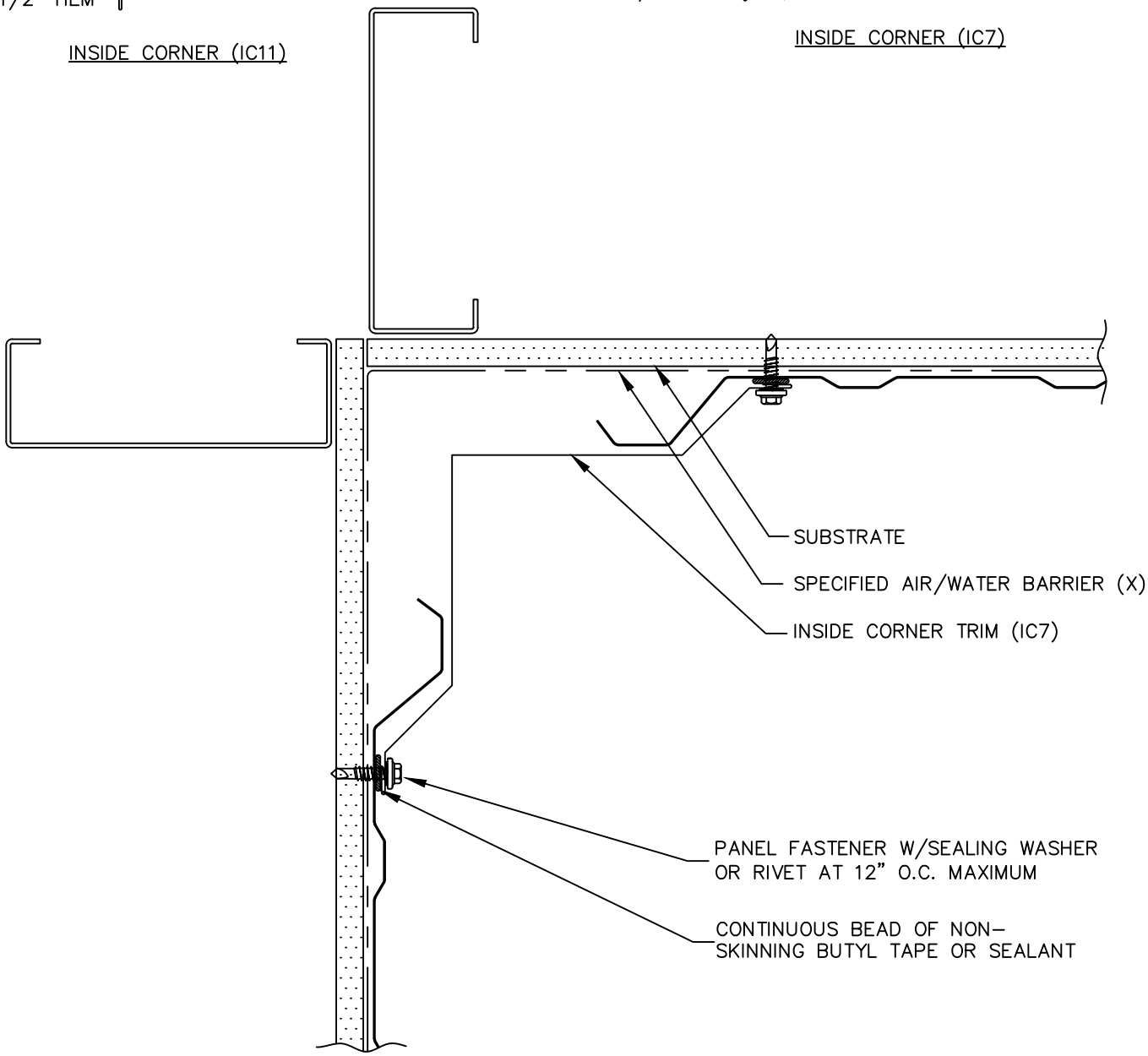

(X) – NOT BY AEP SPAN

AEP SPAN

PBR PANEL

INSIDE CORNER

index

PBR-24

REV. 12/9/25

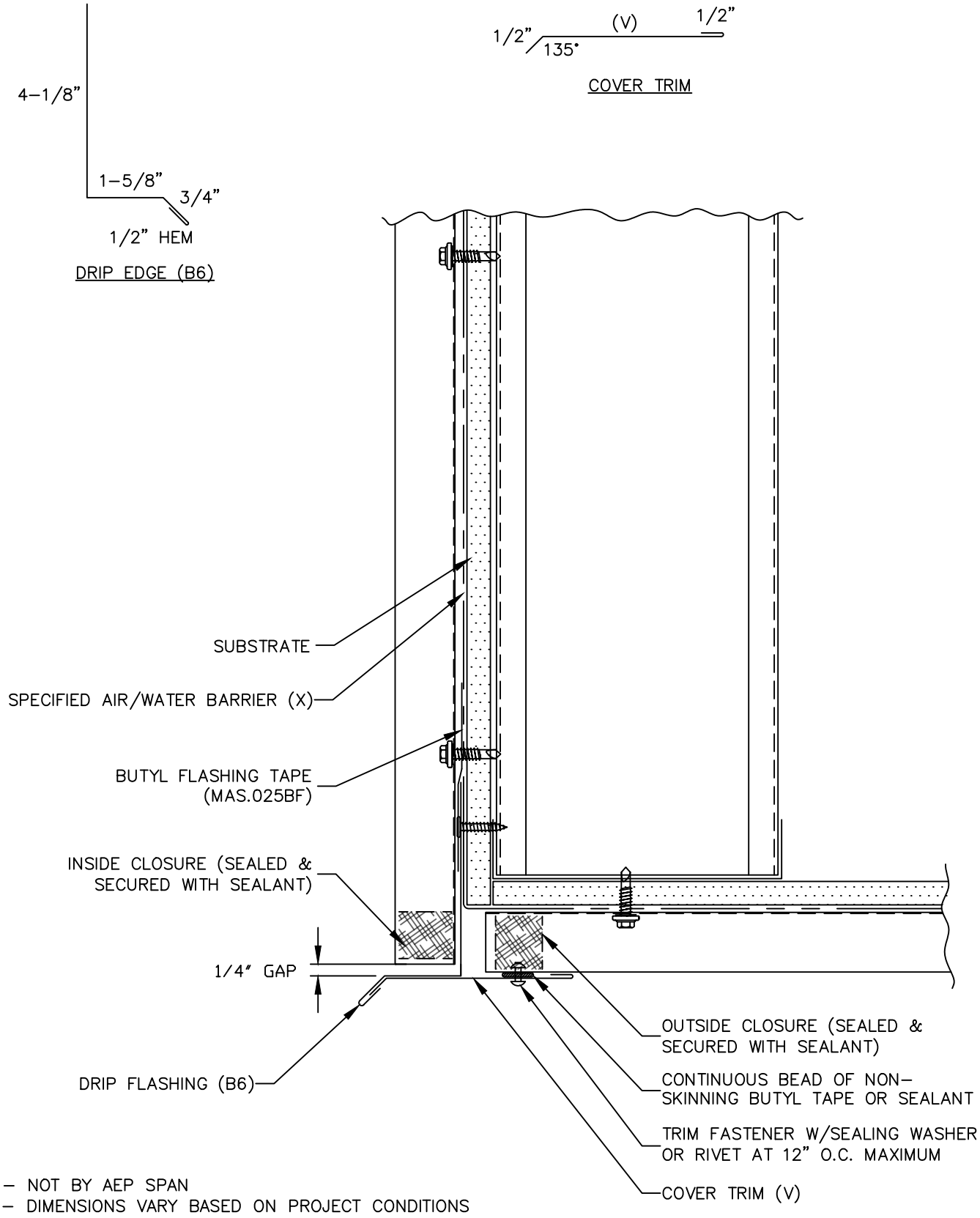

(X) – NOT BY AEP SPAN
(V) – DIMENSIONS VARY BASED ON PROJECT CONDITIONS

AEP SPAN

PBR PANEL

SOFFIT (FRONT)

index

PBR-25

REV. 12/9/25

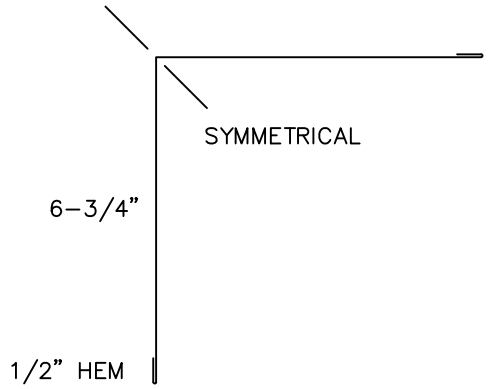

INSIDE CORNER (IC11)

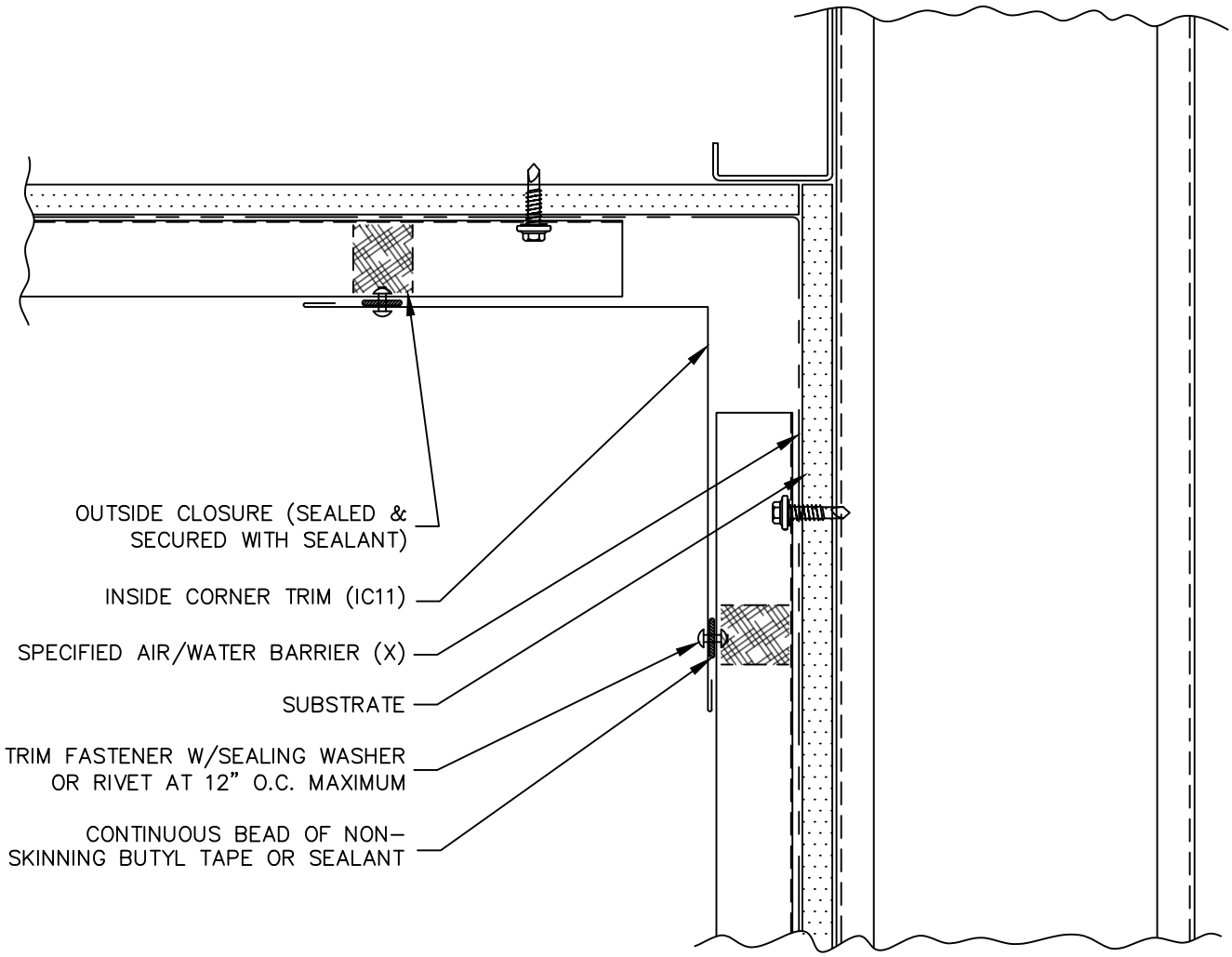

(X) – NOT BY AEP SPAN

AEP SPAN

PBR PANEL

SOFFIT (BACK)

index

PBR-26

REV. 12/9/25

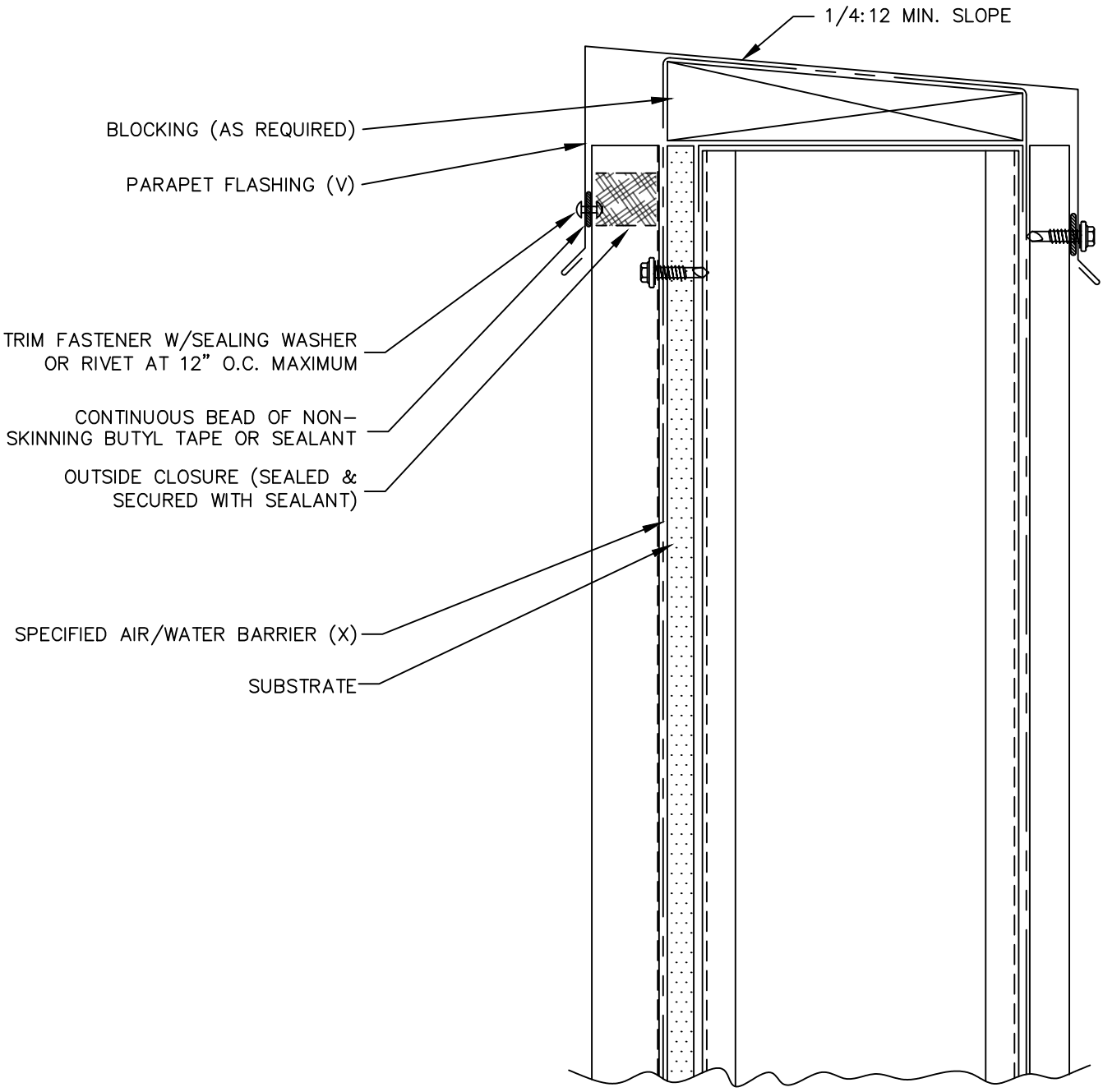

(X) – NOT BY AEP SPAN
(V) – DIMENSIONS VARY BASED ON PROJECT CONDITIONS

AEP SPAN

PBR PANEL

PARAPET

index

PBR-27

REV. 12/9/25

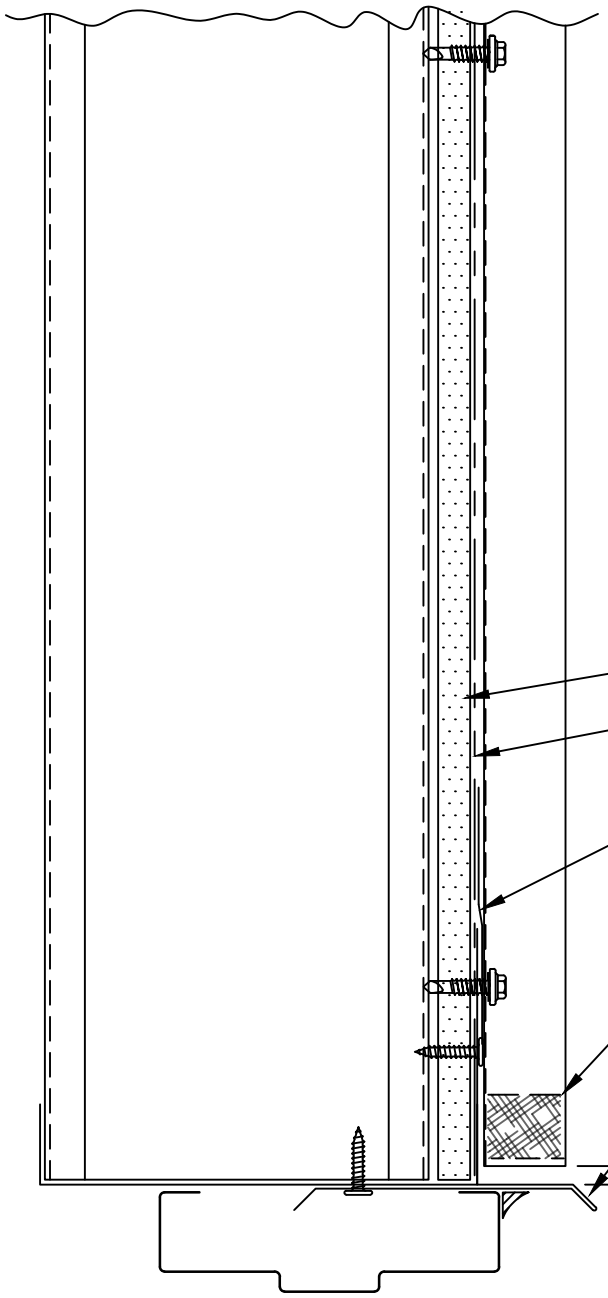

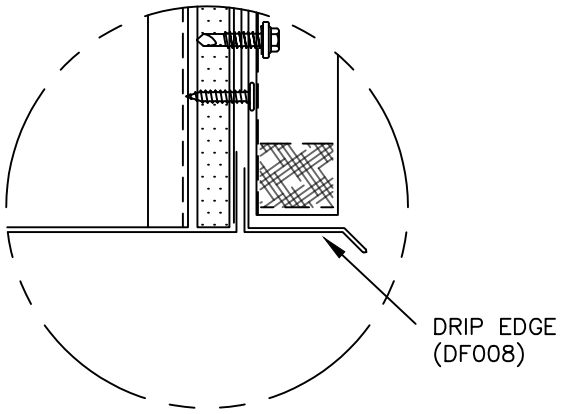

ALTERNATE DETAIL

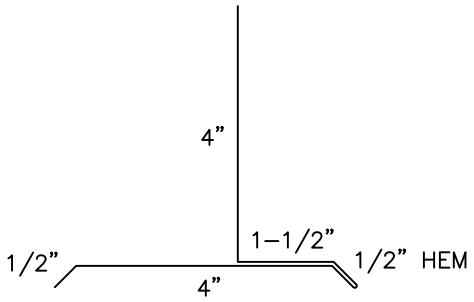

HEADER TRIM (HT095)

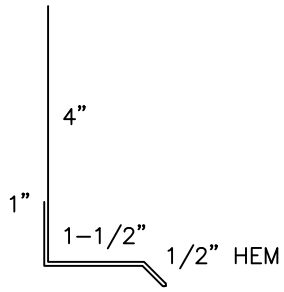

DRIP EDGE (DF008)

(X) – NOT BY AEP SPAN

AEP SPAN

PBR PANEL

DOOR / WINDOW
(HEAD)

index

PBR-28

REV. 12/9/25

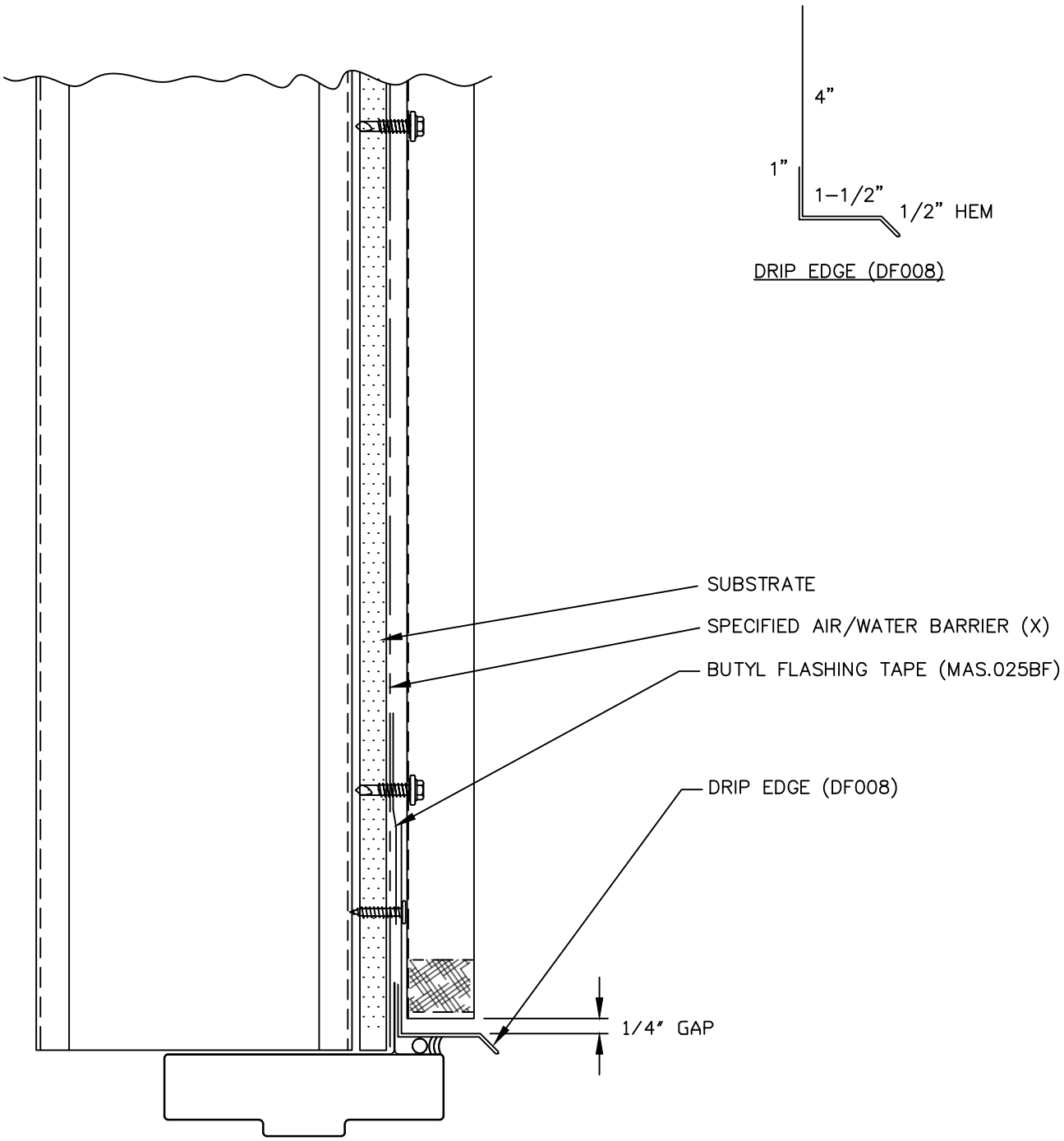

AEP SPAN

PBR PANEL

OPENING, HEAD
(NAIL FIN)

index

PBR-29

REV. 12/9/25

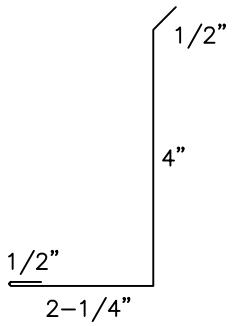

(WC218)

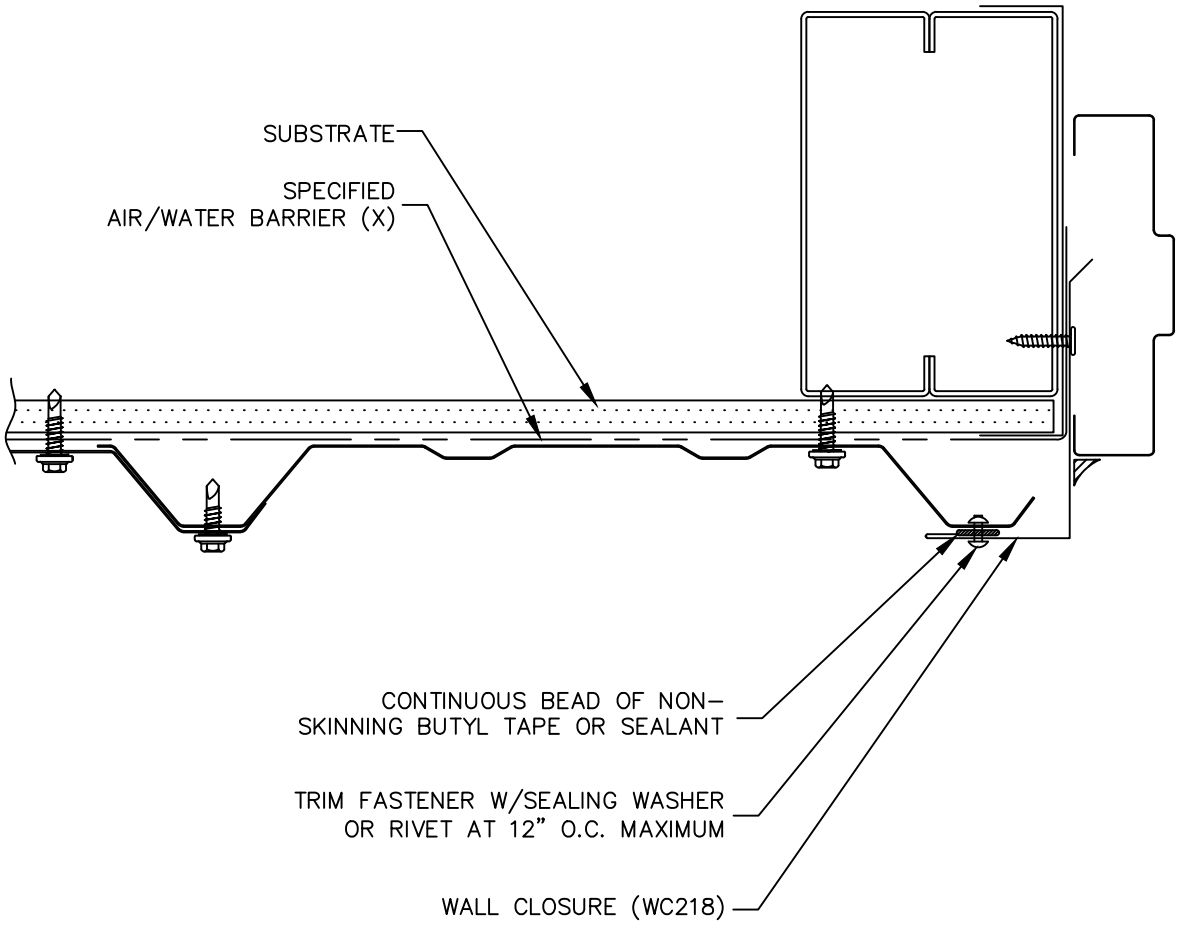

(X) – NOT BY AEP SPAN

AEP SPAN

PBR PANEL

DOOR / WINDOW
(JAMB)

index

PBR-30

REV. 12/9/25

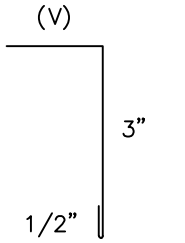

WALL CLOSURE

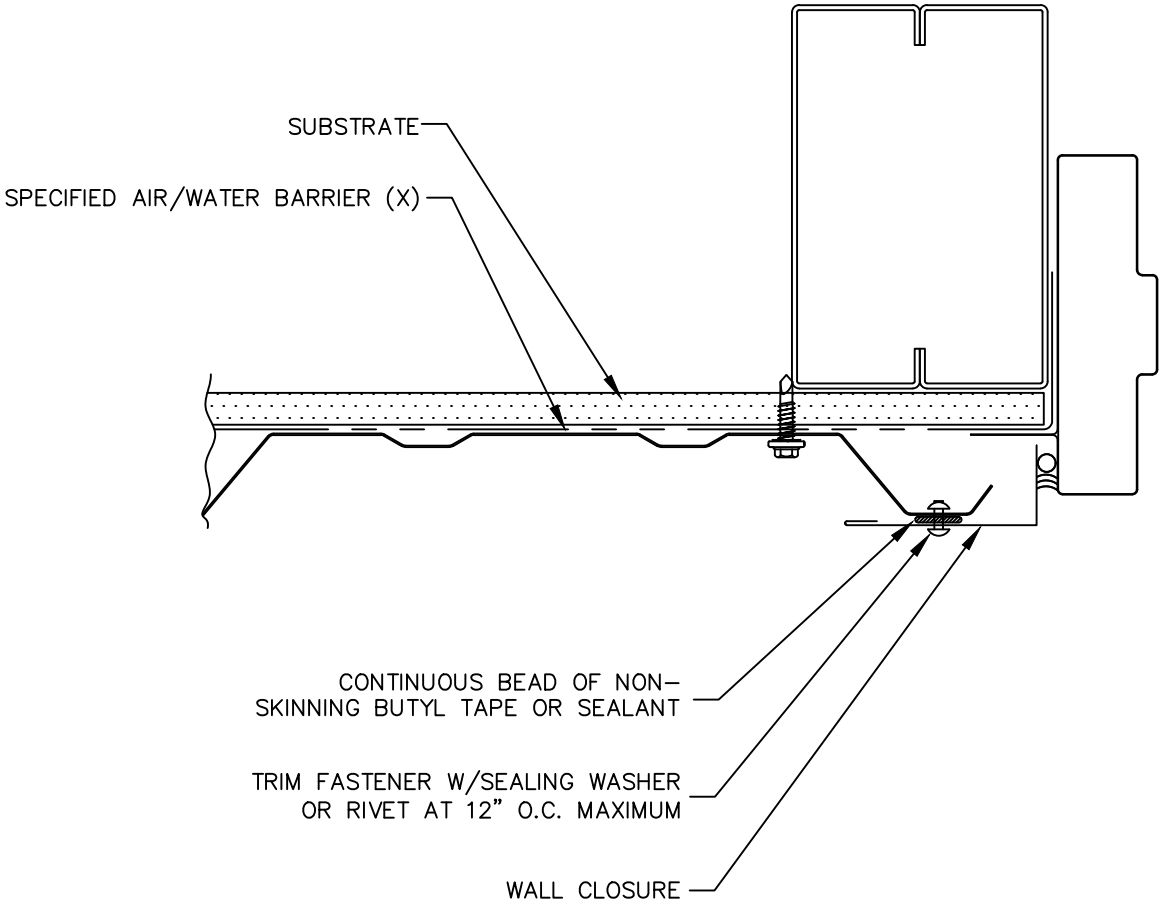

(X) – NOT BY AEP SPAN
(V) – DIMENSIONS VARY BASED ON PROJECT CONDITIONS

AEP SPAN

PBR PANEL

OPENING, JAMB
(NAIL FIN)

index

PBR-31

REV. 12/9/25

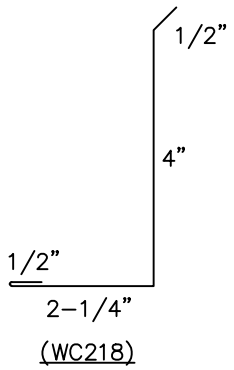

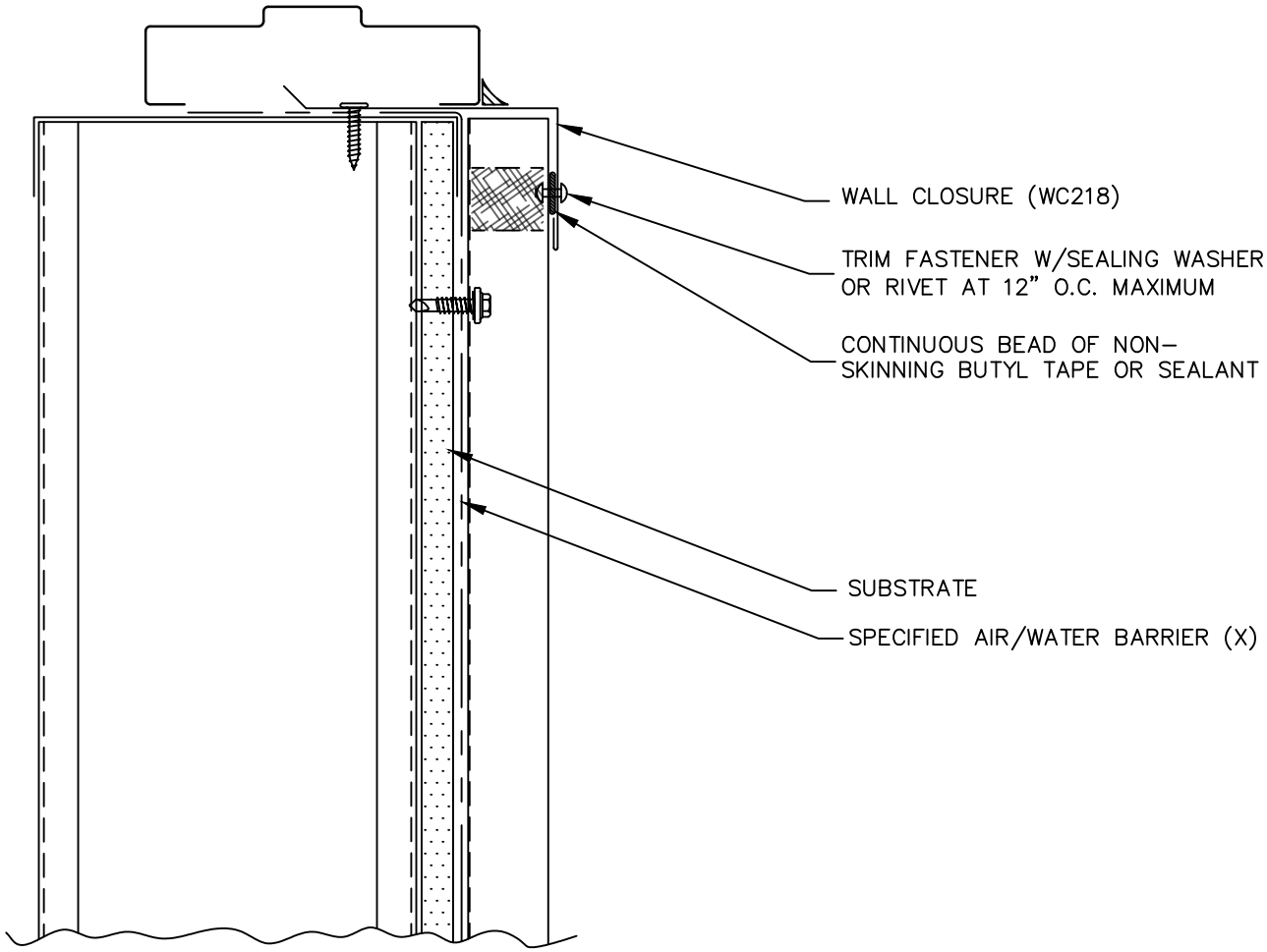

(X) – NOT BY AEP SPAN

AEP SPAN

PBR PANEL

DOOR / WINDOW (SILL)

index

PBR-32

REV. 12/18/24

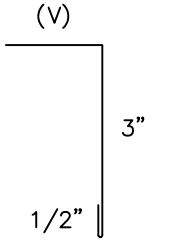

WALL CLOSURE

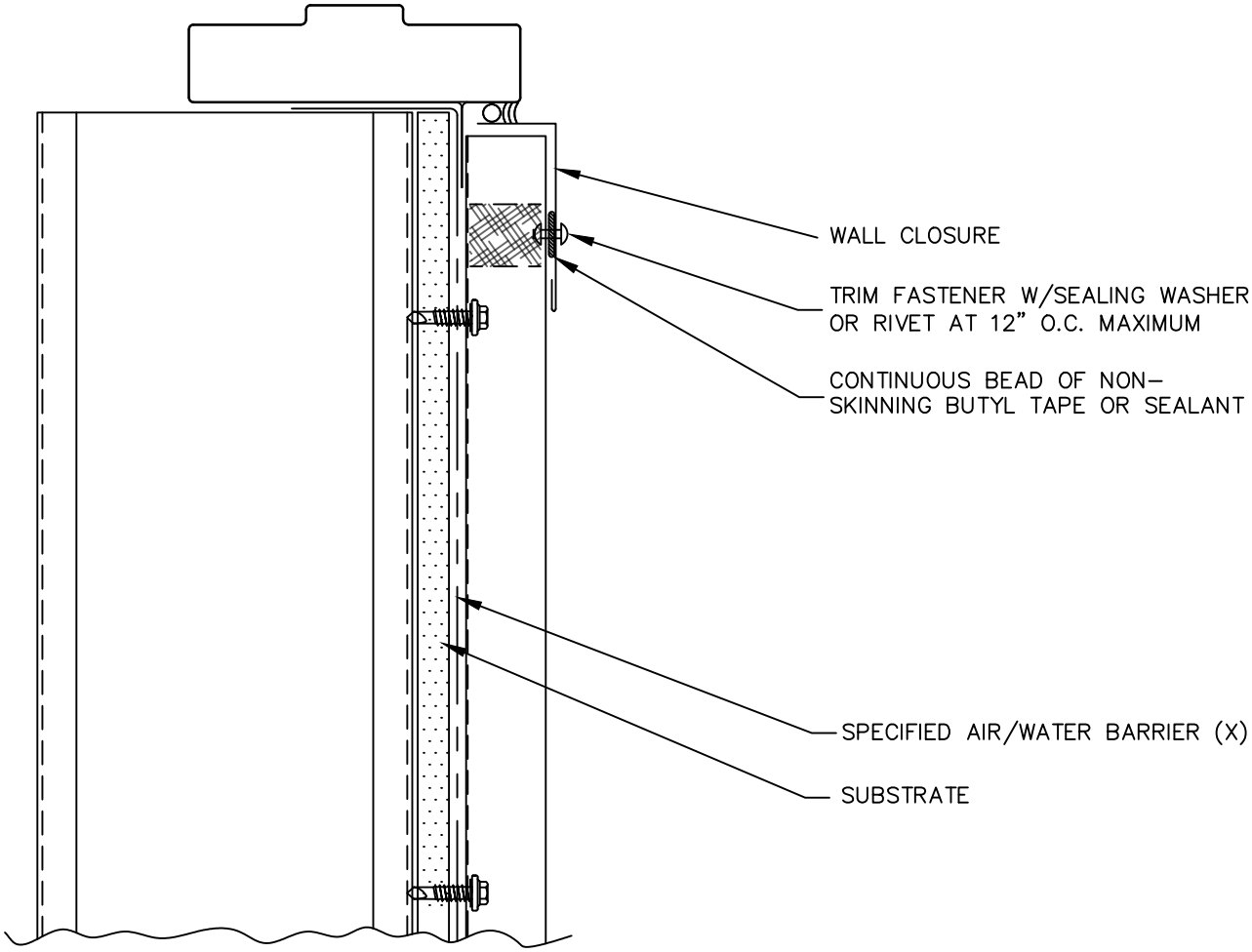

(X) – NOT BY AEP SPAN
(V) – DIMENSIONS VARY BASED ON PROJECT CONDITIONS

AEP SPAN

PBR PANEL

OPENING, SILL
(NAIL FIN)

index

PBR-33

REV. 12/9/25

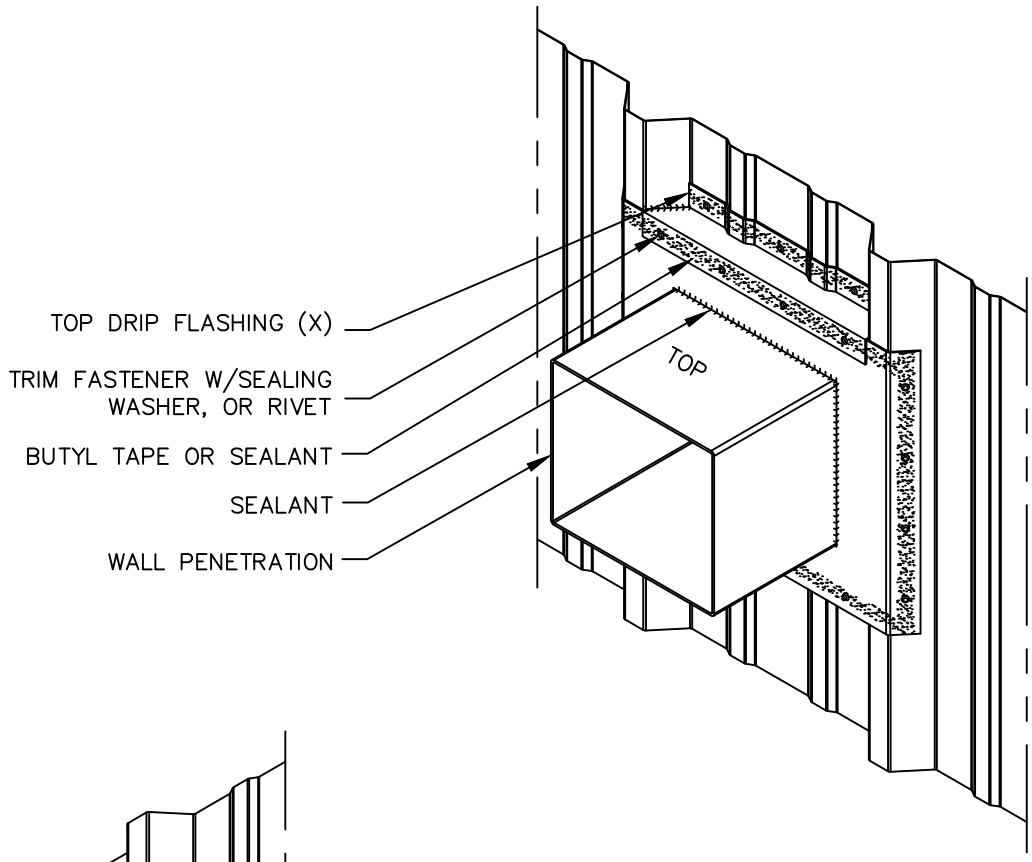

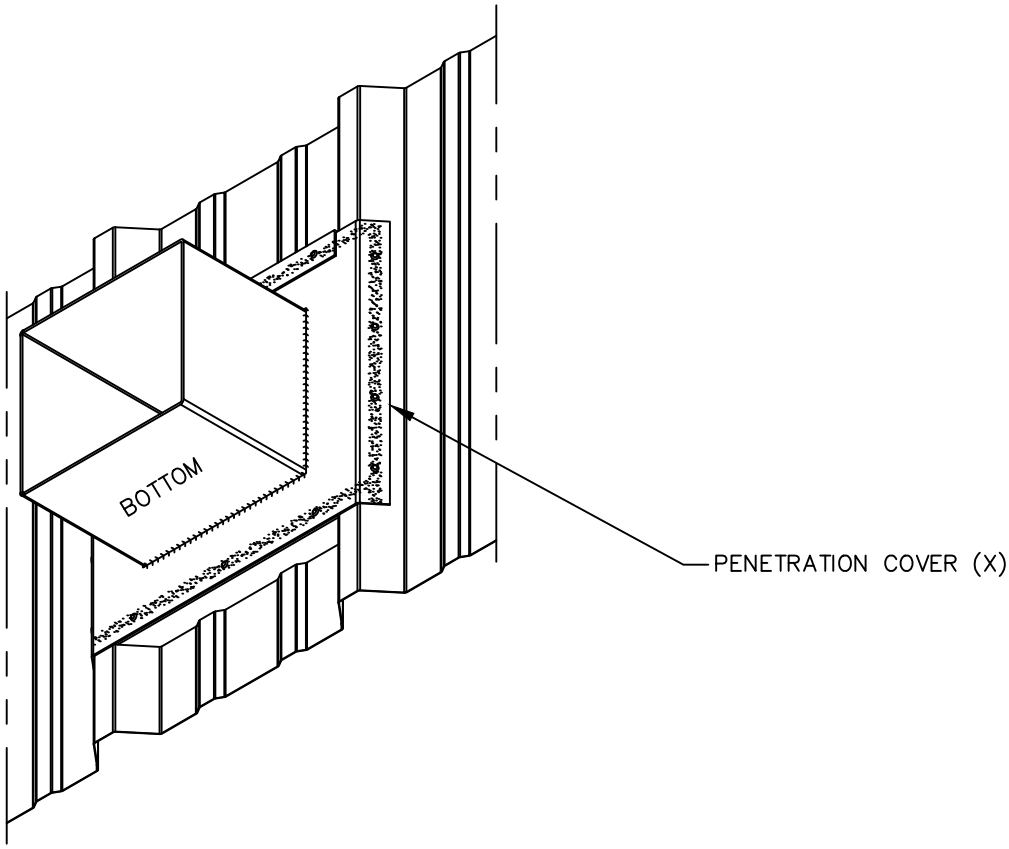

(X) – NOT BY AEP SPAN

AEP SPAN

PBR PANEL

PENETRATION (3D)

index

PBR-34

REV. 12/9/25

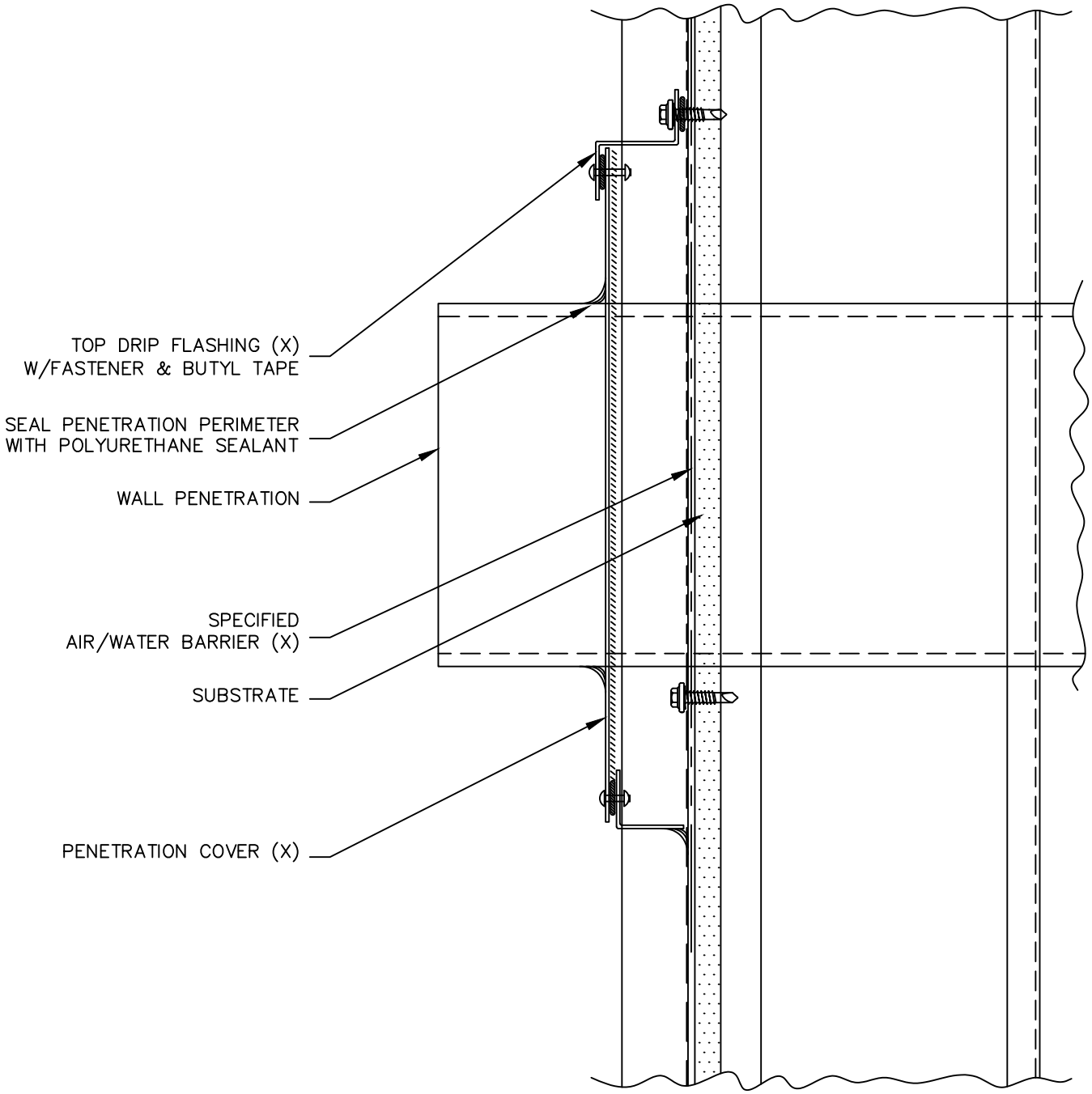

(X) – NOT BY AEP SPAN

AEP SPAN

PBR PANEL

PENETRATION (2D)

index

PBR-35

REV. 12/9/25

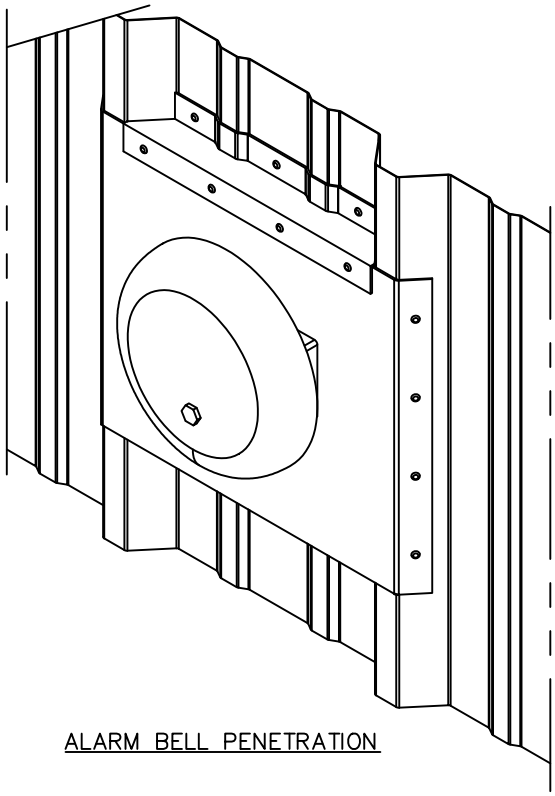

ALARM BELL PENETRATION

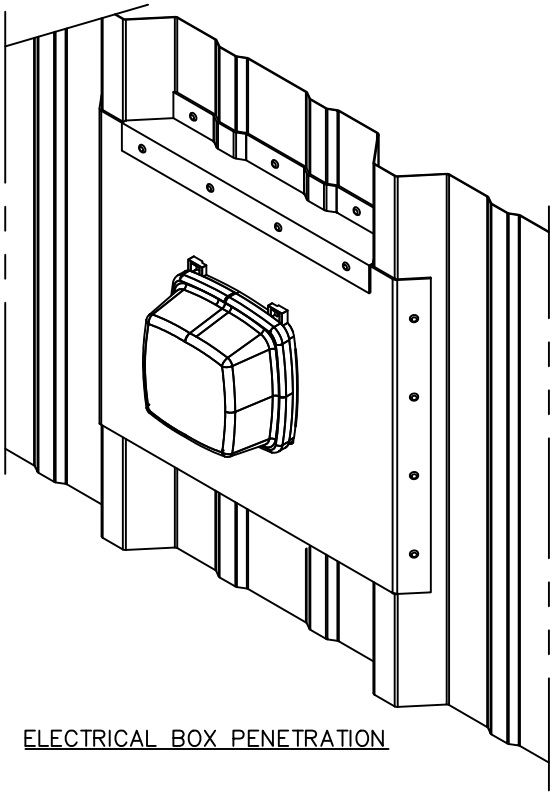

ELECTRICAL BOX PENETRATION

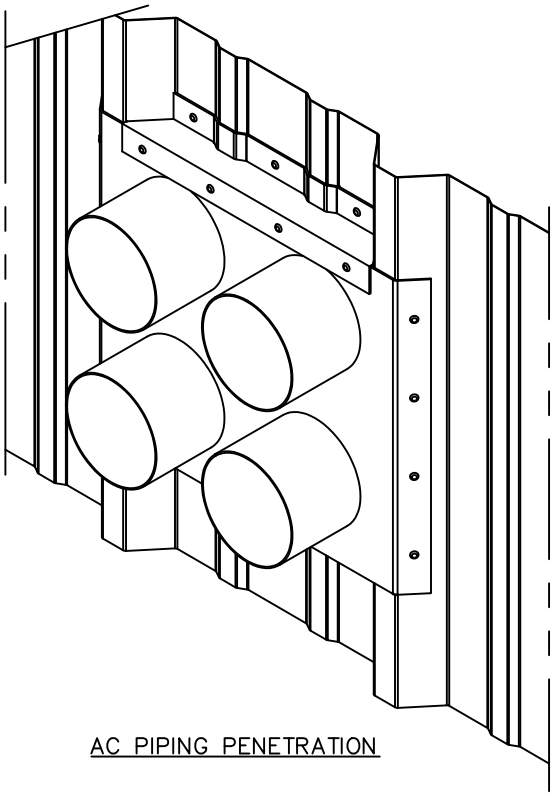

AC PIPING PENETRATION

AEP SPAN

PBR PANEL

PENETRATION (3D) EXAMPLES

index

PBR-36

REV. 12/9/25

HORIZONTAL WALL DETAILS

AEP SPAN

PBR PANEL

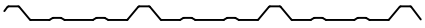

index

PBR-37

REV. 12/9/25

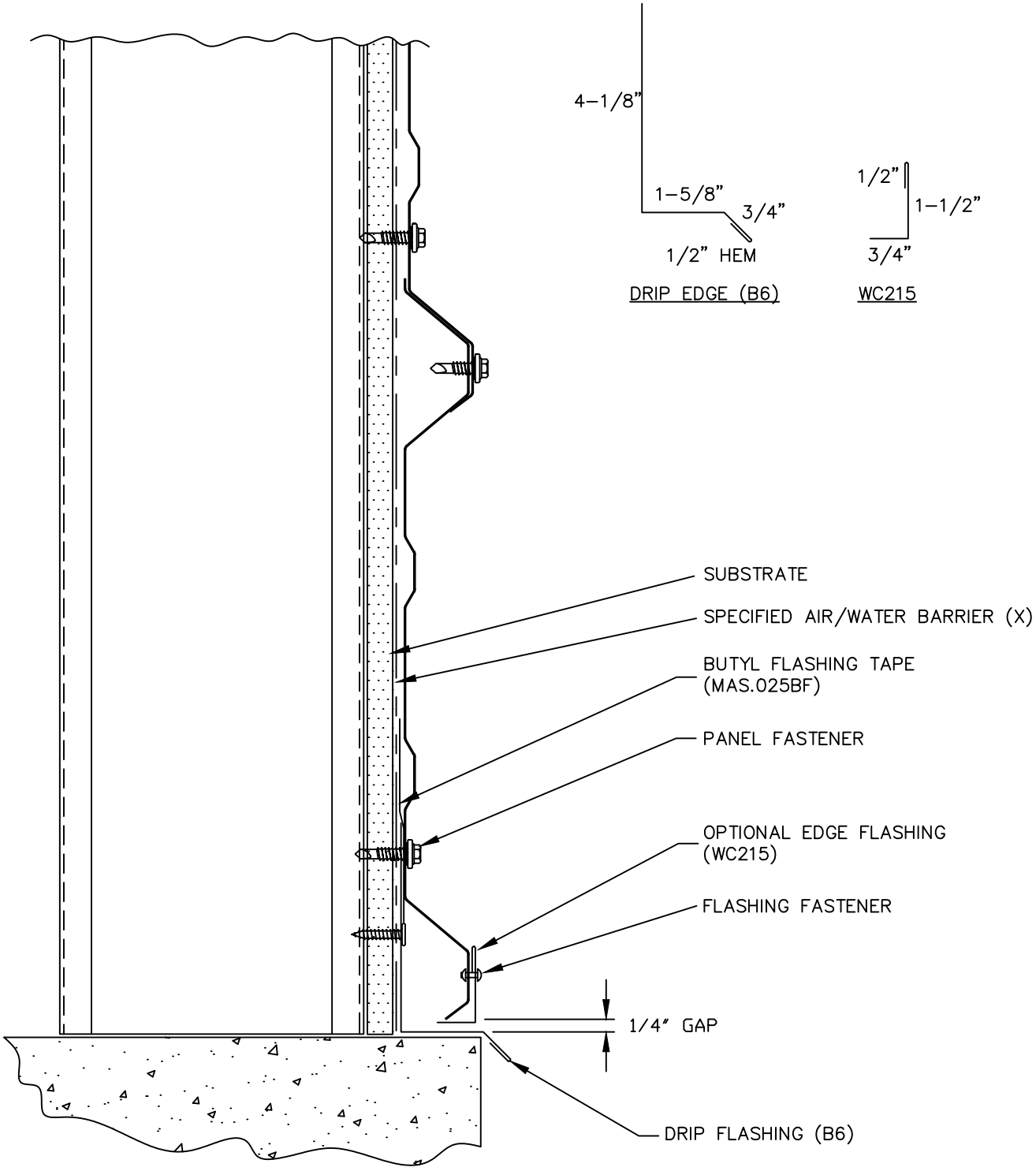

HORIZONTAL PBR PANELS ARE INSTALLED FROM GROUND TO EAVE.

(X) – NOT BY AEP SPAN

AEP SPAN

PBR PANEL

BASE

index

PBR-38

REV. 12/9/25

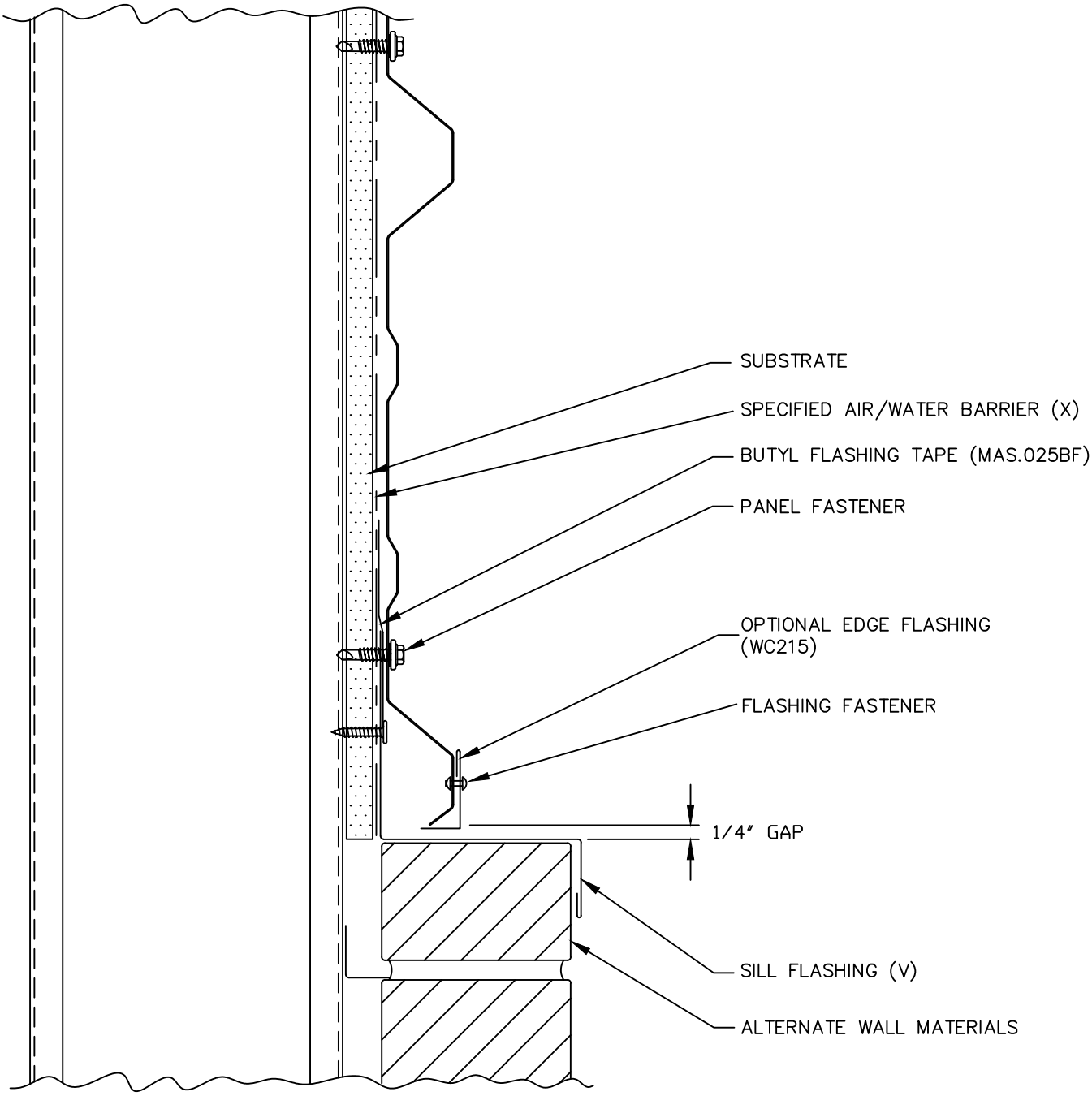

(X) – NOT BY AEP SPAN
(V) – DIMENSIONS VARY BASED ON PROJECT CONDITIONS

AEP SPAN

PBR PANEL

SILL

index

PBR-39

REV. 12/9/25

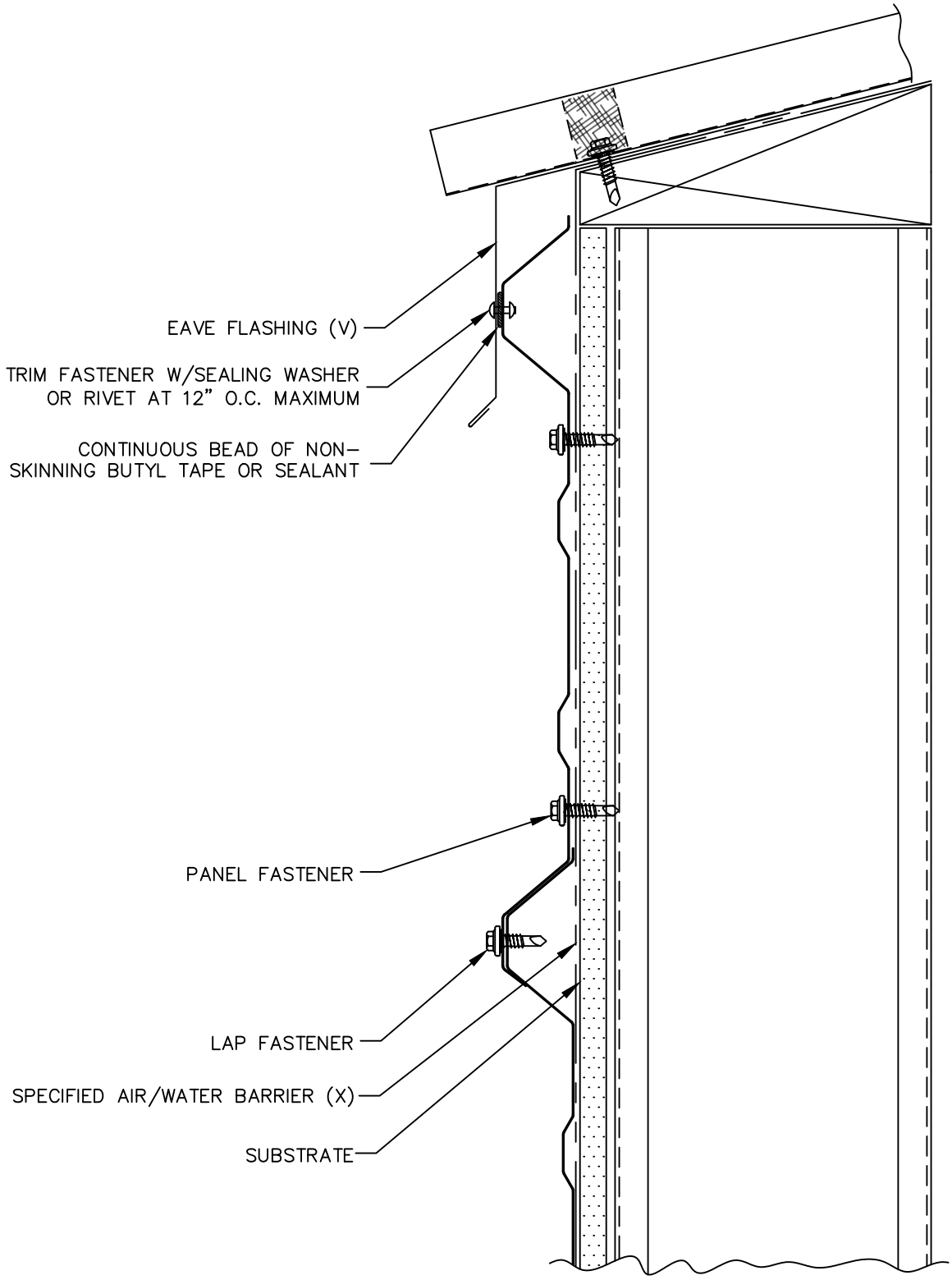

(X) – NOT BY AEP SPAN
(V) – DIMENSIONS VARY BASED ON PROJECT CONDITIONS

AEP SPAN

PBR PANEL

EAVE / FASCIA

index

PBR-40

REV. 12/9/25

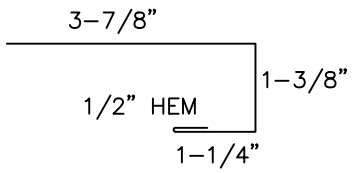

C–METAL (C6)

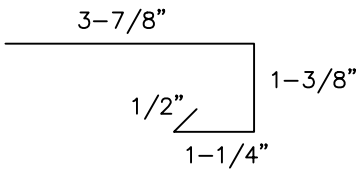

JAMB TRIM (J6)

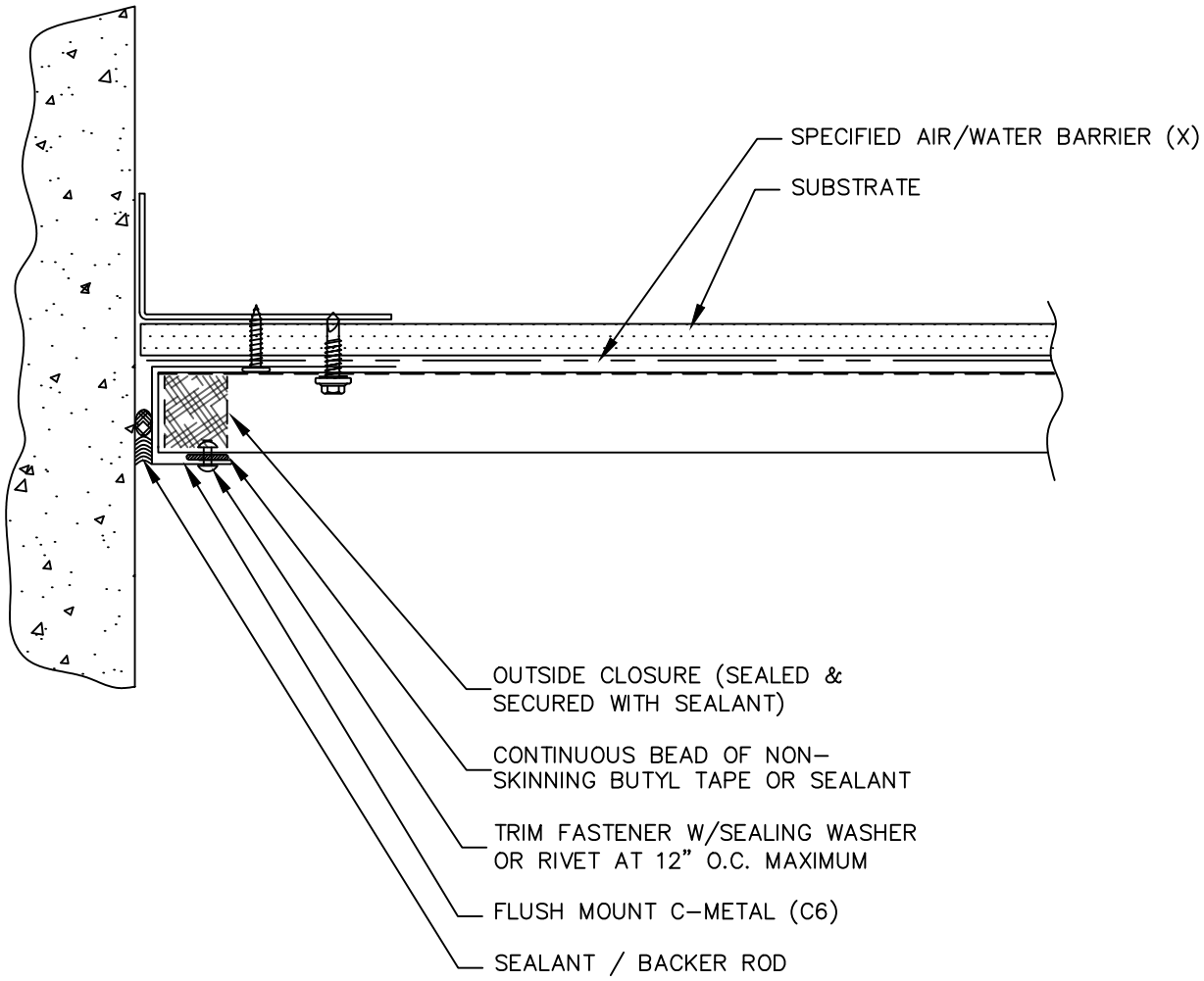

(X) – NOT BY AEP SPAN

AEP SPAN

PBR PANEL

END WALL

index

PBR-41

REV. 12/9/25

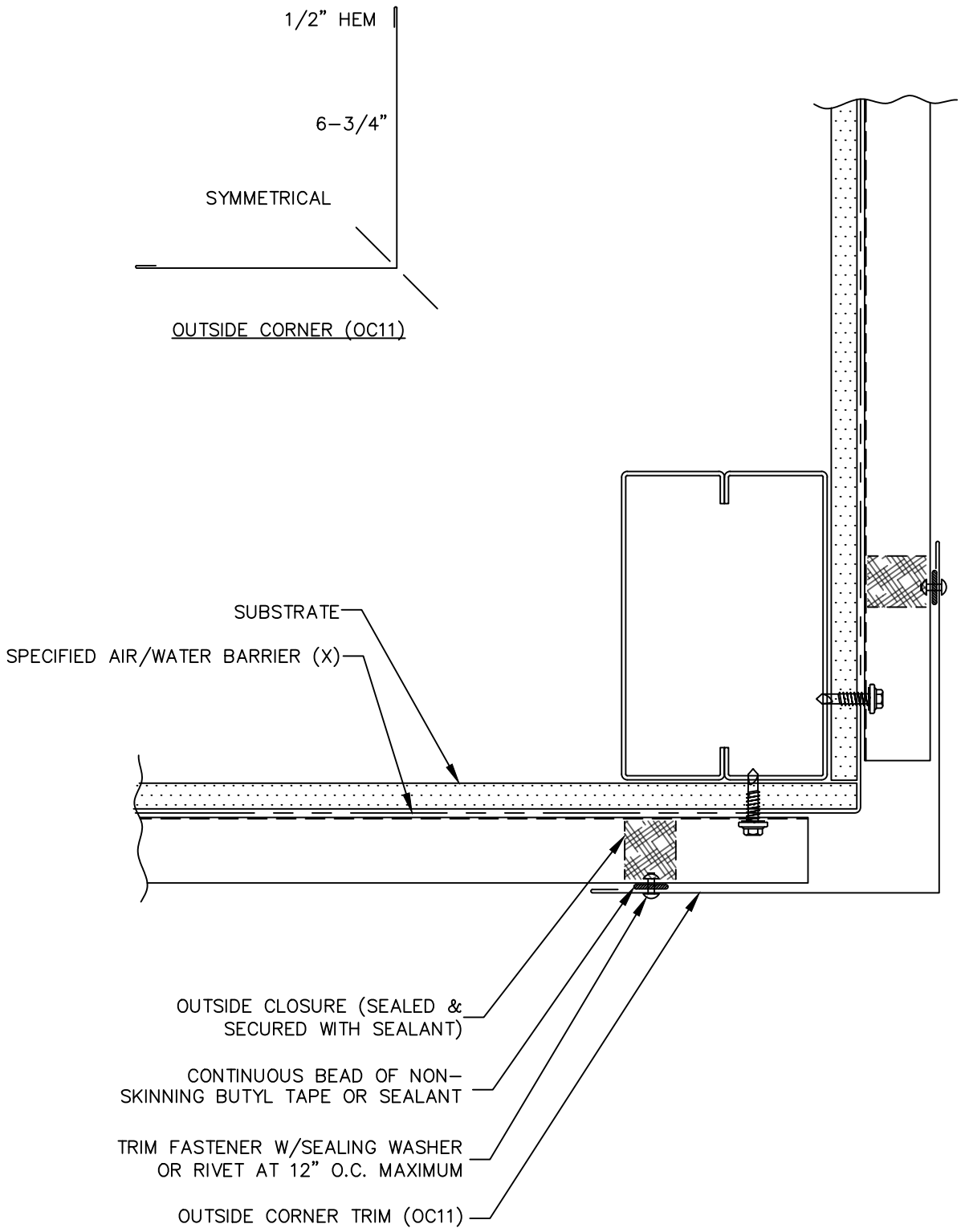

(X) – NOT BY AEP SPAN

AEP SPAN

PBR PANEL

OUTSIDE CORNER

index

PBR-42

REV. 12/9/25

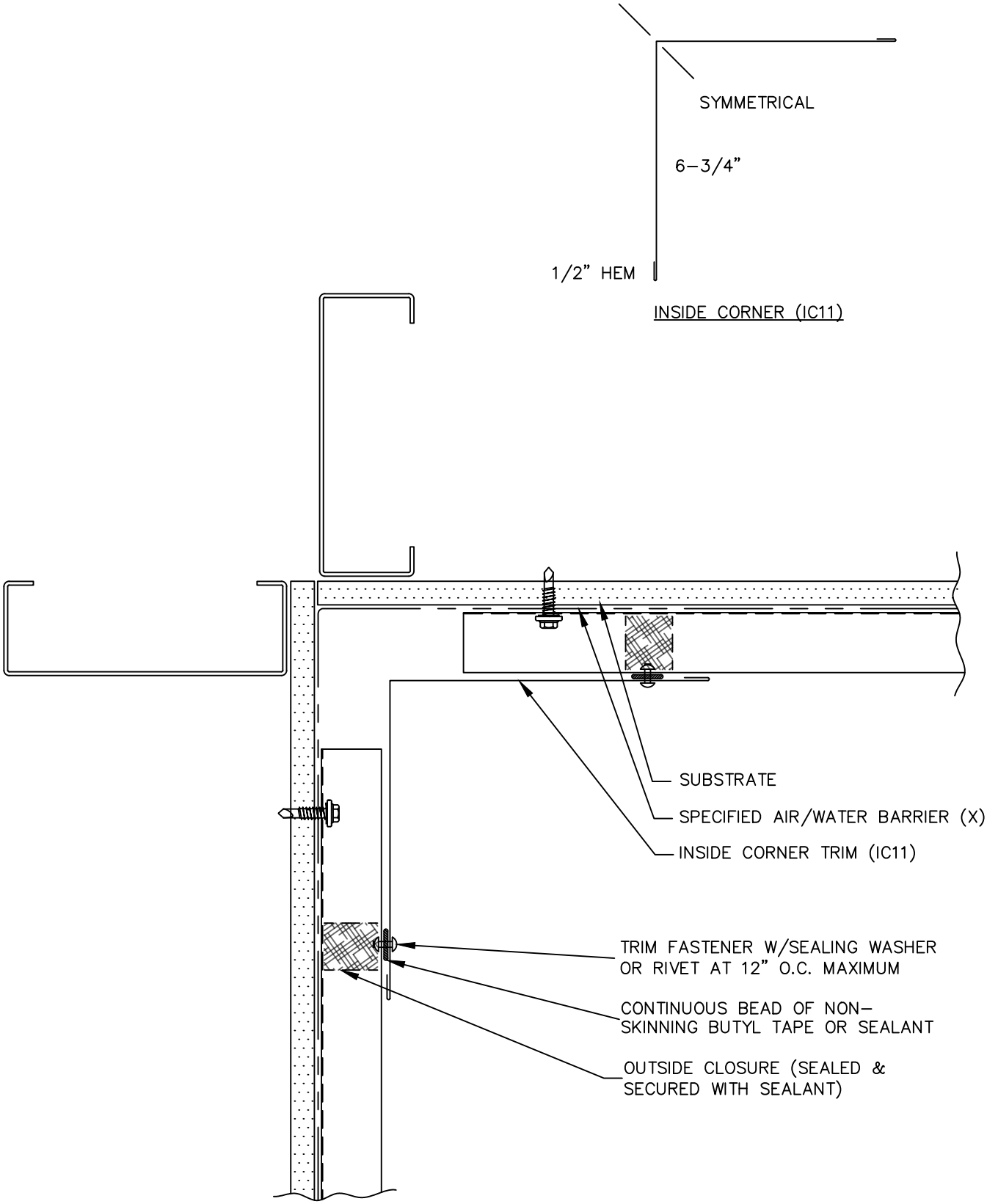

(X) – NOT BY AEP SPAN

AEP SPAN

PBR PANEL

INSIDE CORNER

index

PBR-43

REV. 12/9/25

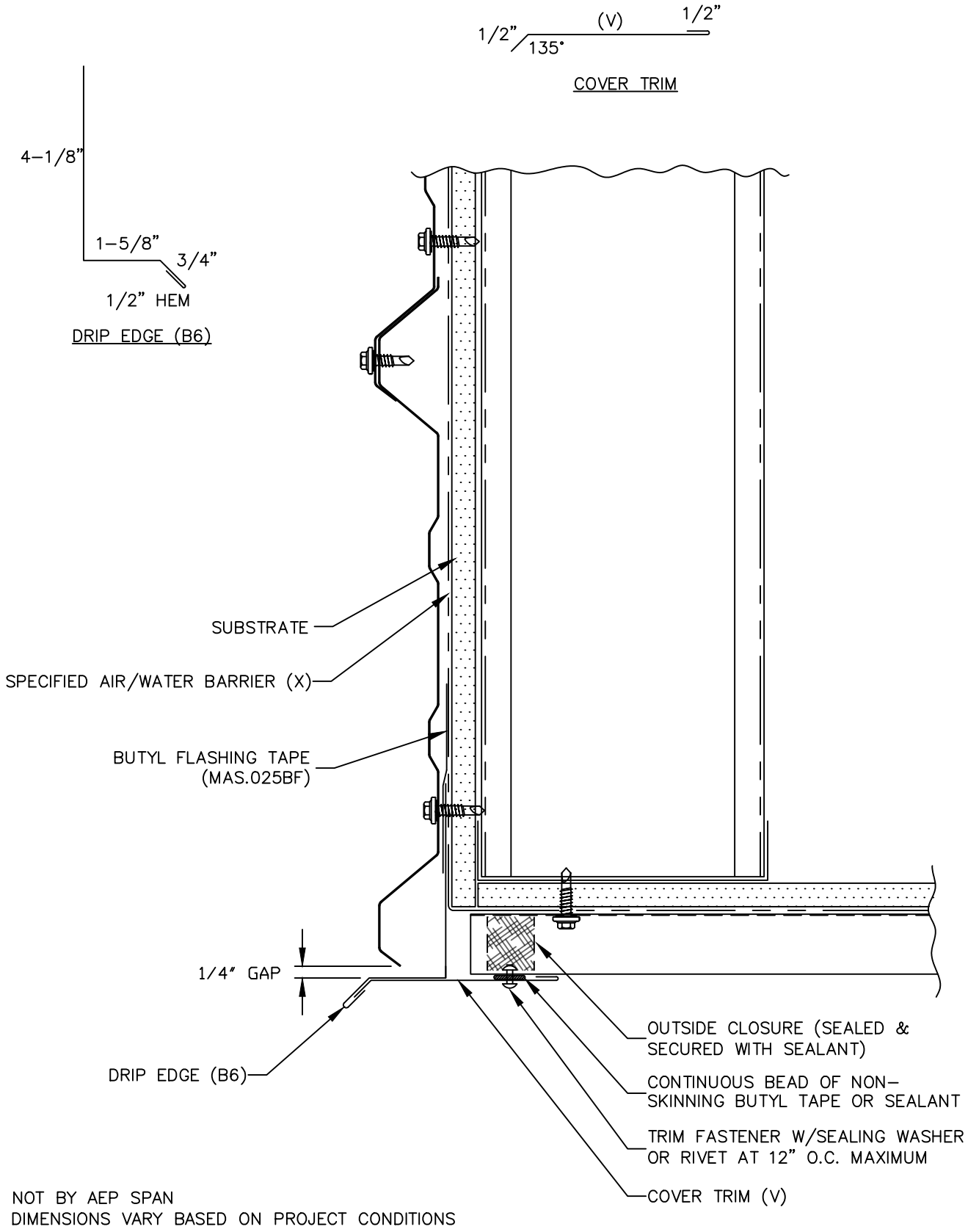

(X) – NOT BY AEP SPAN
(V) – DIMENSIONS VARY BASED ON PROJECT CONDITIONS

AEP SPAN

PBR PANEL

SOFFIT (FRONT)

index

PBR-44

REV. 12/9/25

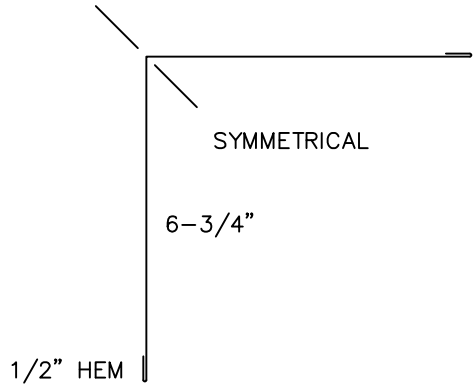

INSIDE CORNER (IC11)

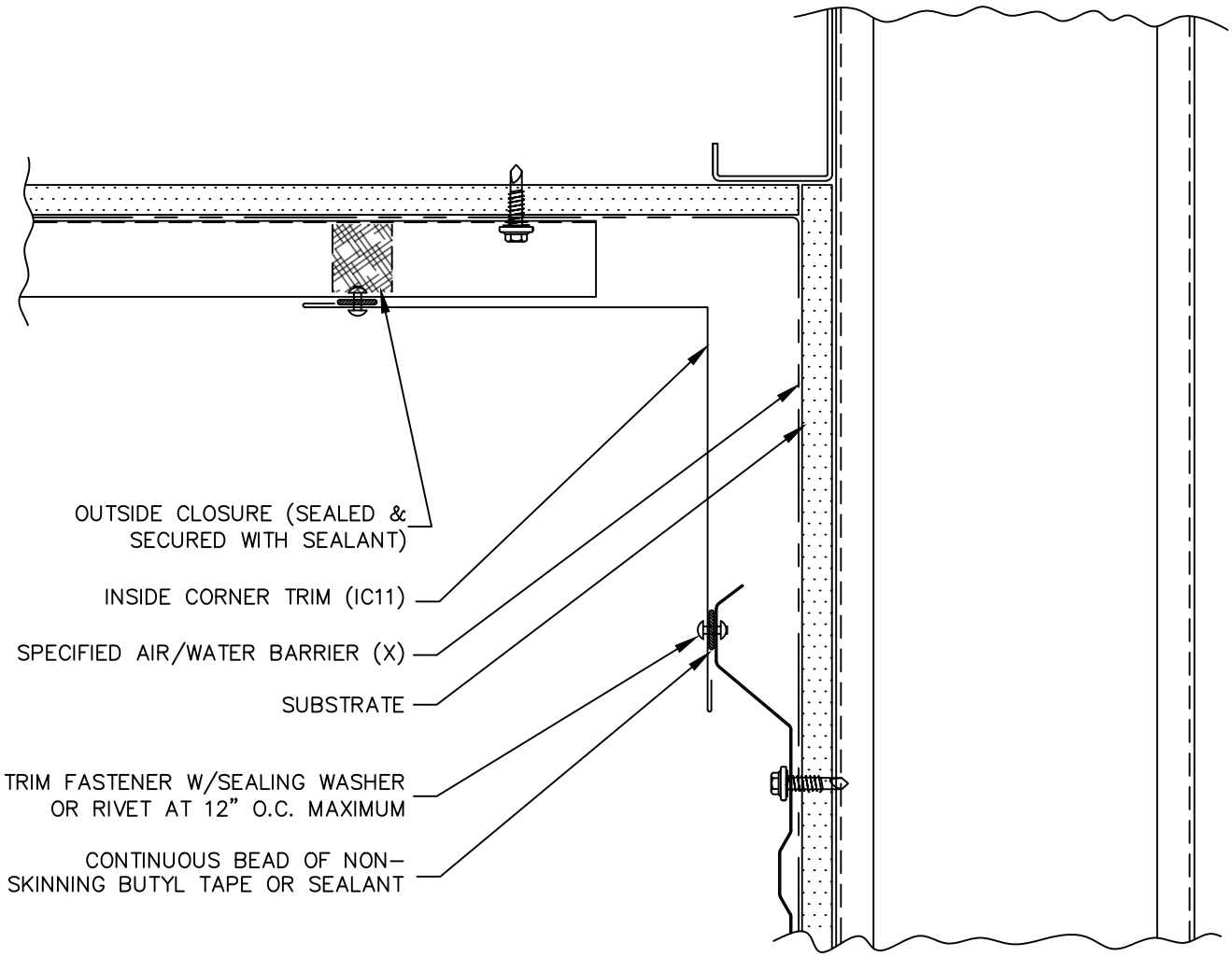

(X) – NOT BY AEP SPAN

AEP SPAN

PBR PANEL

SOFFIT (BACK)

index

PBR-45

REV. 12/9/25

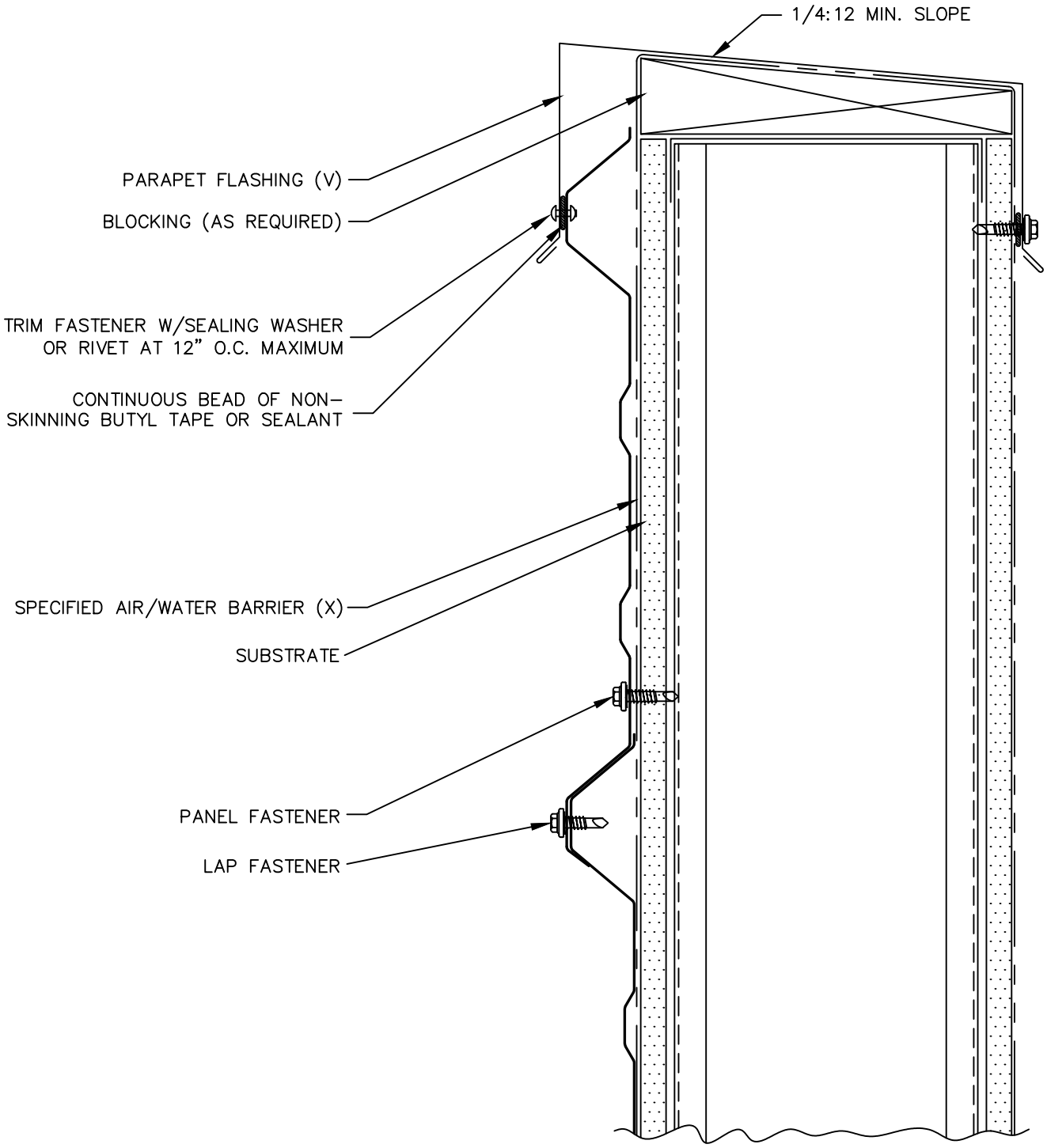

(X) – NOT BY AEP SPAN
(V) – DIMENSIONS VARY BASED ON PROJECT CONDITIONS

AEP SPAN

PBR PANEL

PARAPET

index

PBR-46

REV. 12/9/25

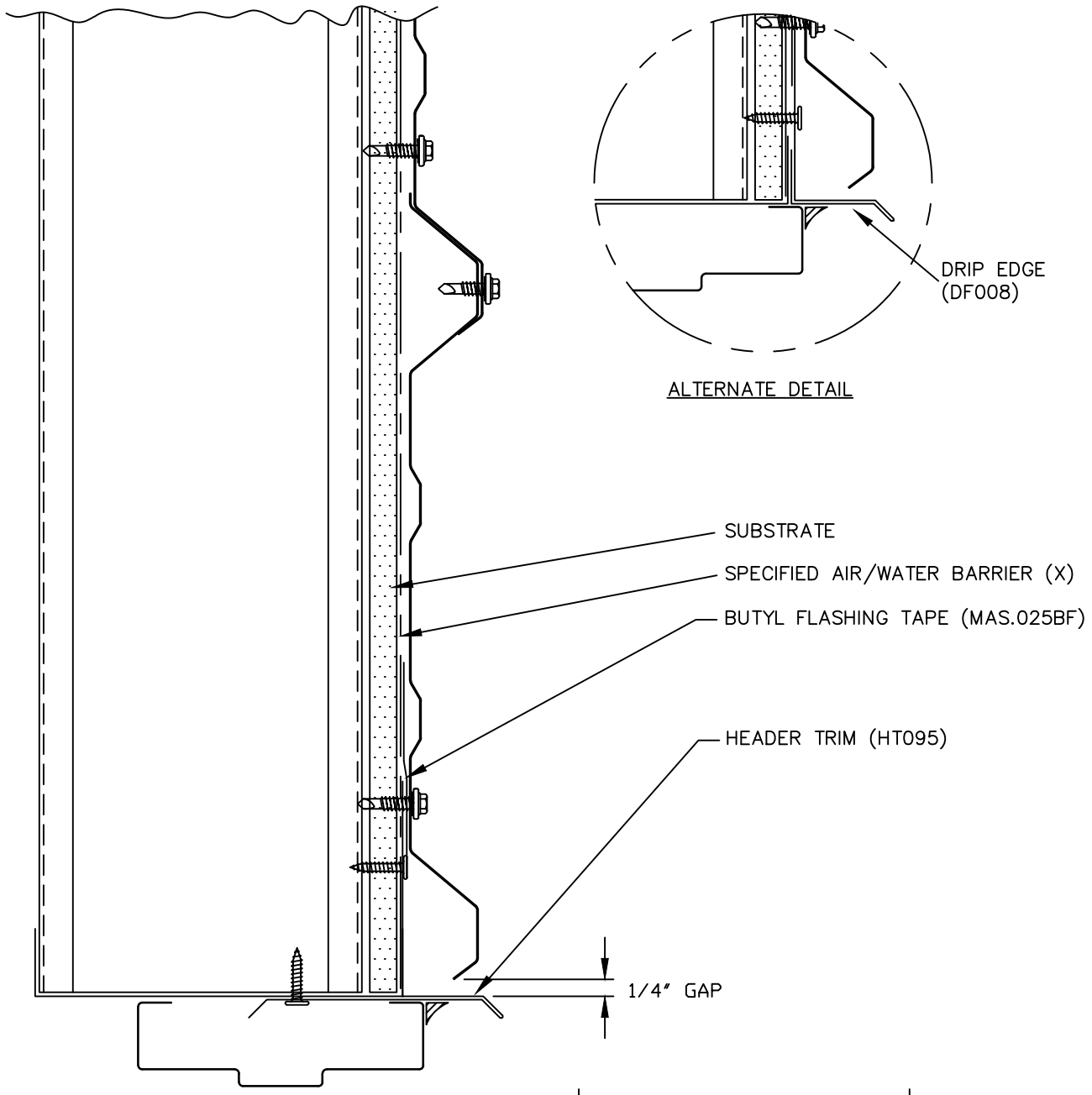

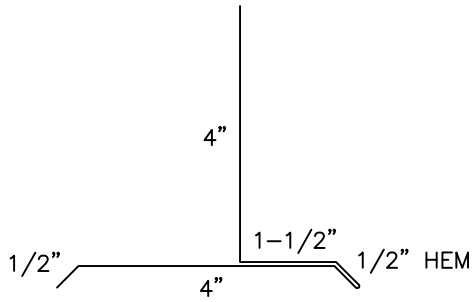

DRIP EDGE (HT095)

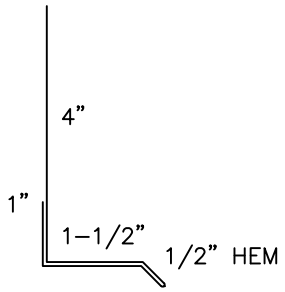

DRIP EDGE (DF008)

(X) – NOT BY AEP SPAN

AEP SPAN

PBR PANEL

DOOR / WINDOW
(HEAD)

index

PBR-47

REV. 12/9/25

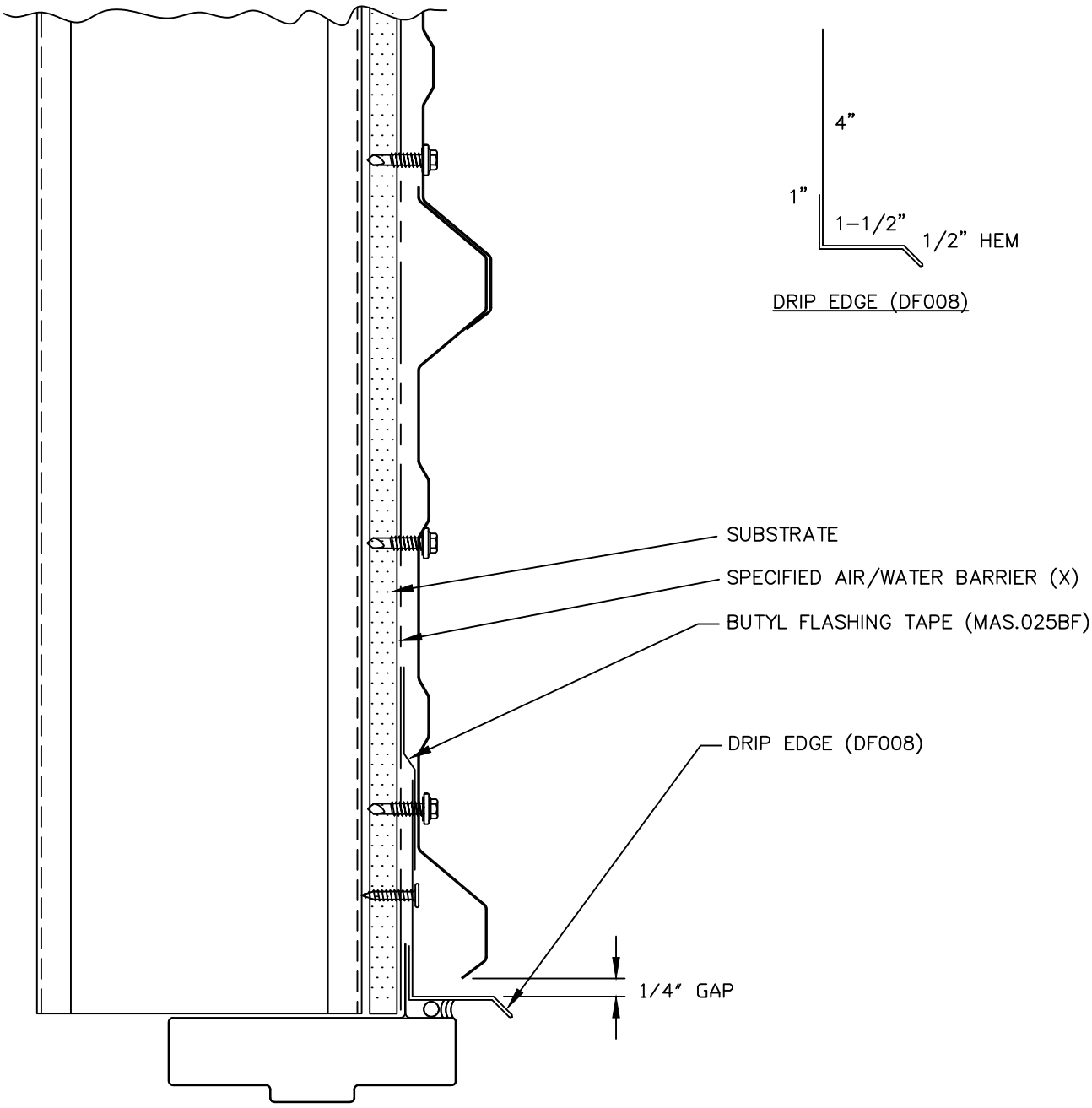

AEP SPAN

PBR PANEL

OPENING, HEAD
(NAIL FIN)

index

PBR-48

REV. 12/9/25

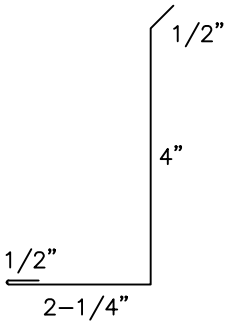

(WC218)

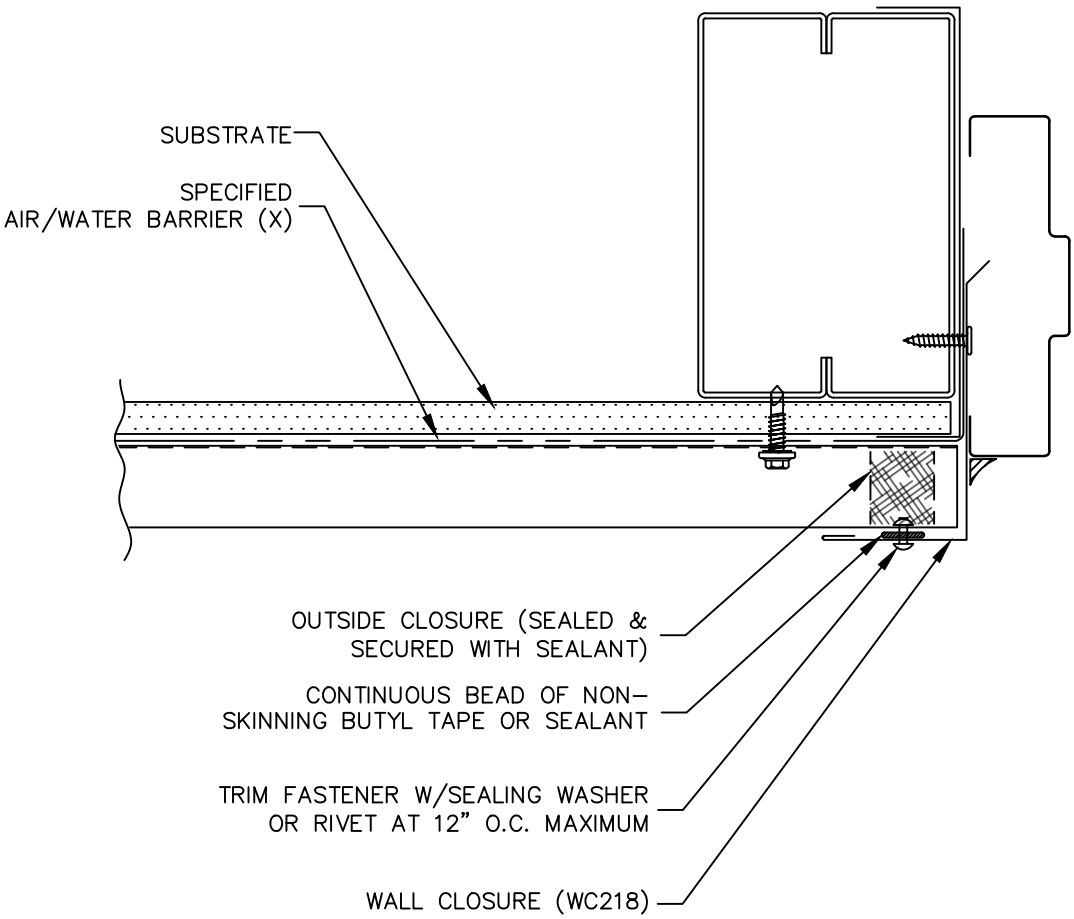

(X) – NOT BY AEP SPAN

AEP SPAN

PBR PANEL

DOOR / WINDOW
(JAMB)

index

PBR-49

REV. 12/9/25

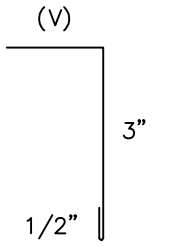

WALL CLOSURE

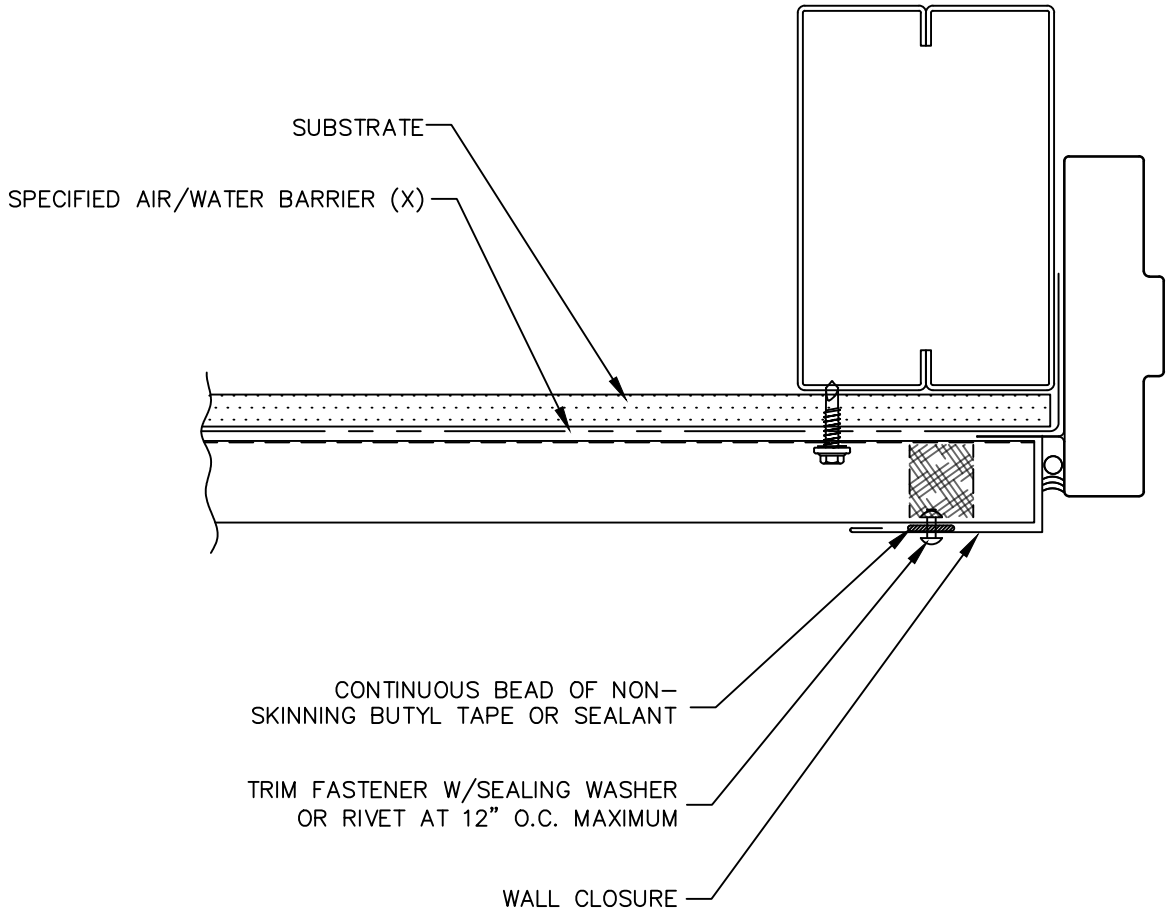

(V) – DIMENSIONS VARY

AEP SPAN

PBR PANEL

OPENING, JAMB
(NAIL FIN)

index

PBR-50

REV. 12/9/25

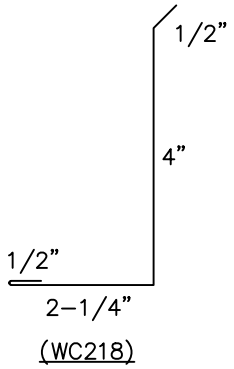

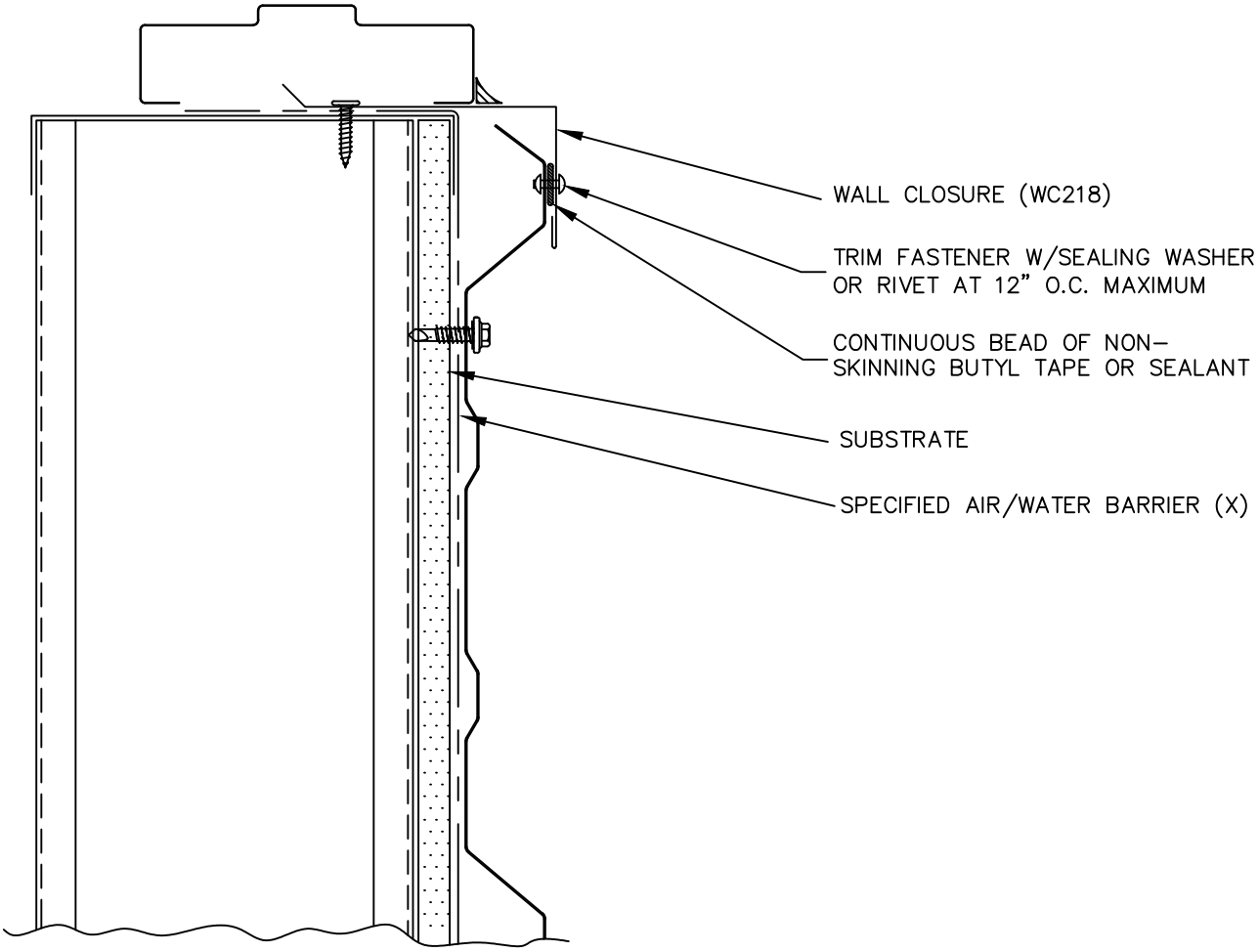

(X) – NOT BY AEP SPAN

AEP SPAN

PBR PANEL

DOOR / WINDOW (SILL)

index

PBR-51

REV. 12/9/25

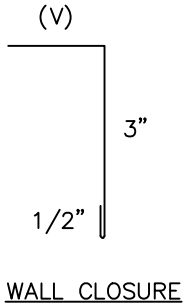

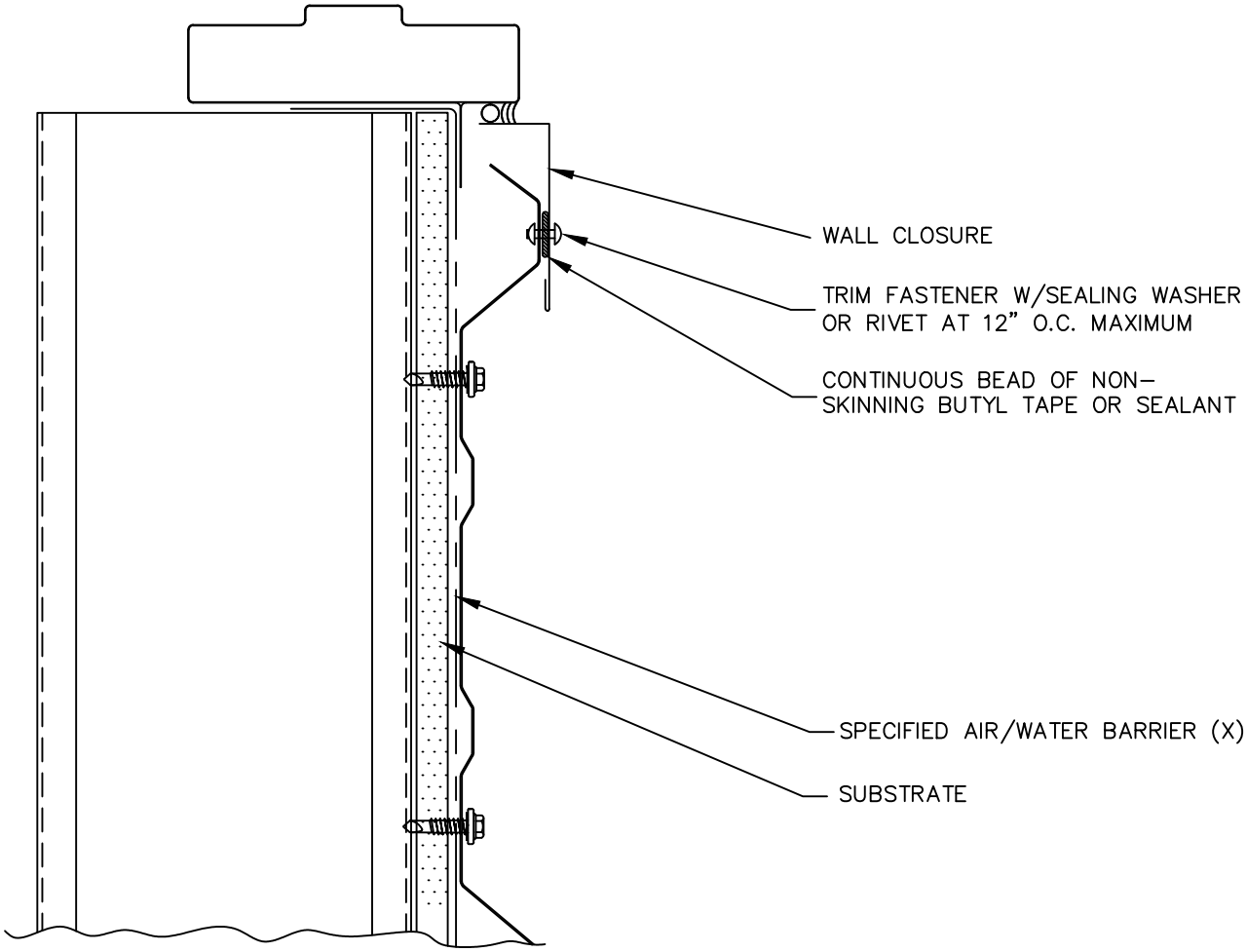

(X) – NOT BY AEP SPAN

AEP SPAN

PBR PANEL

OPENING, SILL
(NAIL FIN)

index

PBR-52

REV. 12/9/25

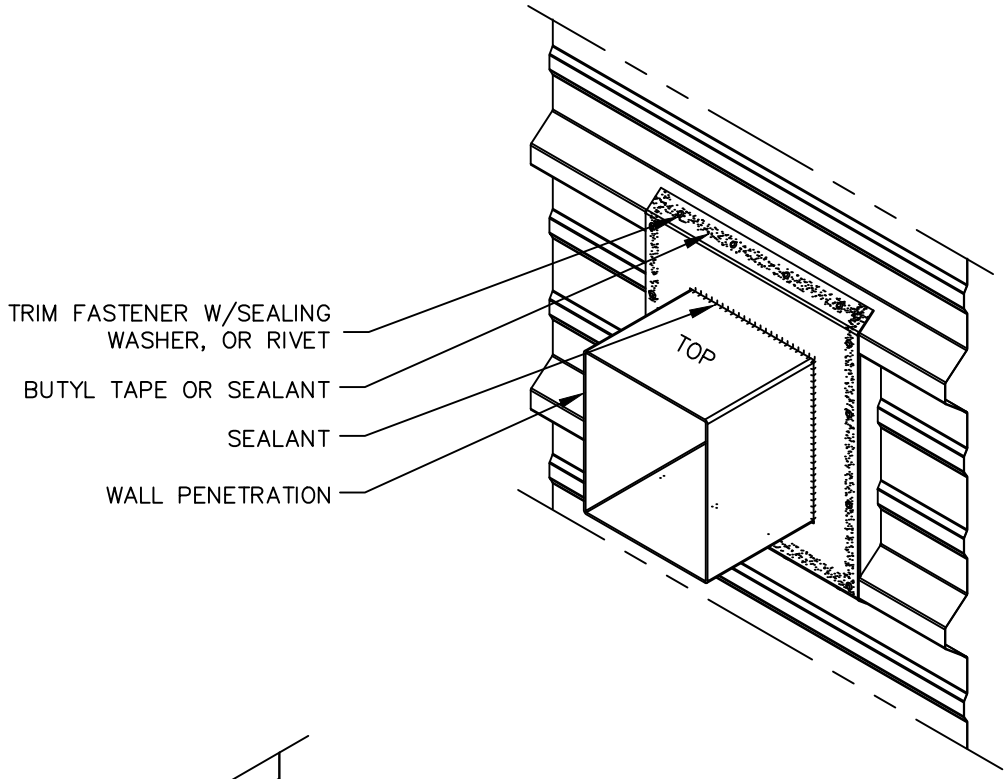

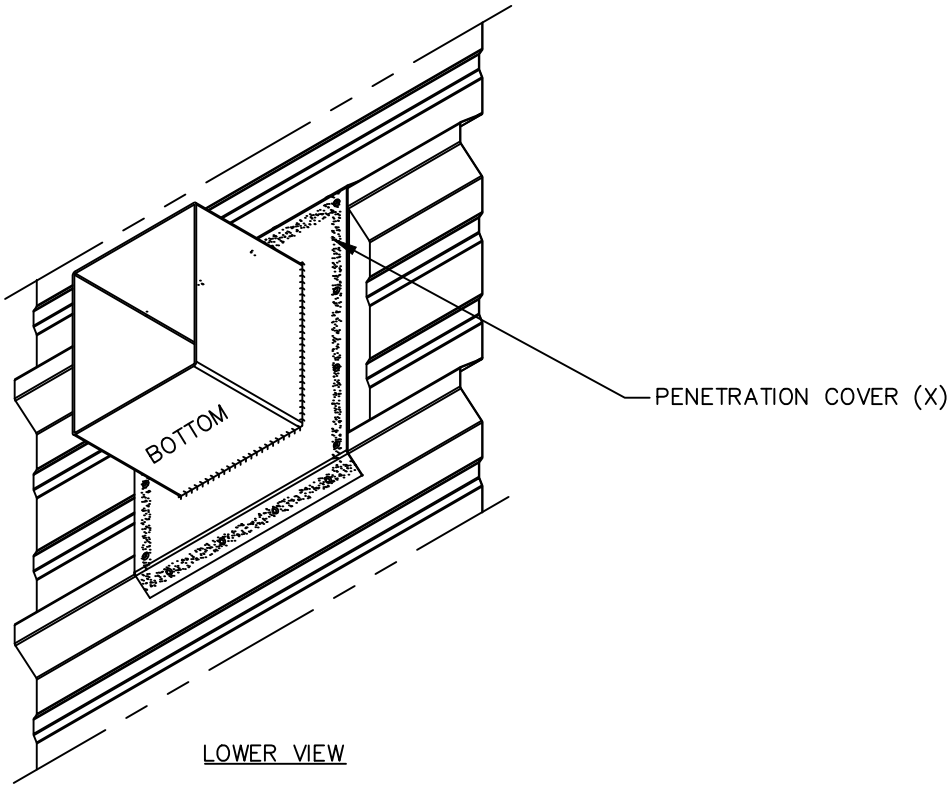

LOWER VIEW

(X) – NOT BY AEP SPAN

AEP SPAN

PBR PANEL

WALL PENETRATION (3D)

index

PBR-53

REV. 12/9/25

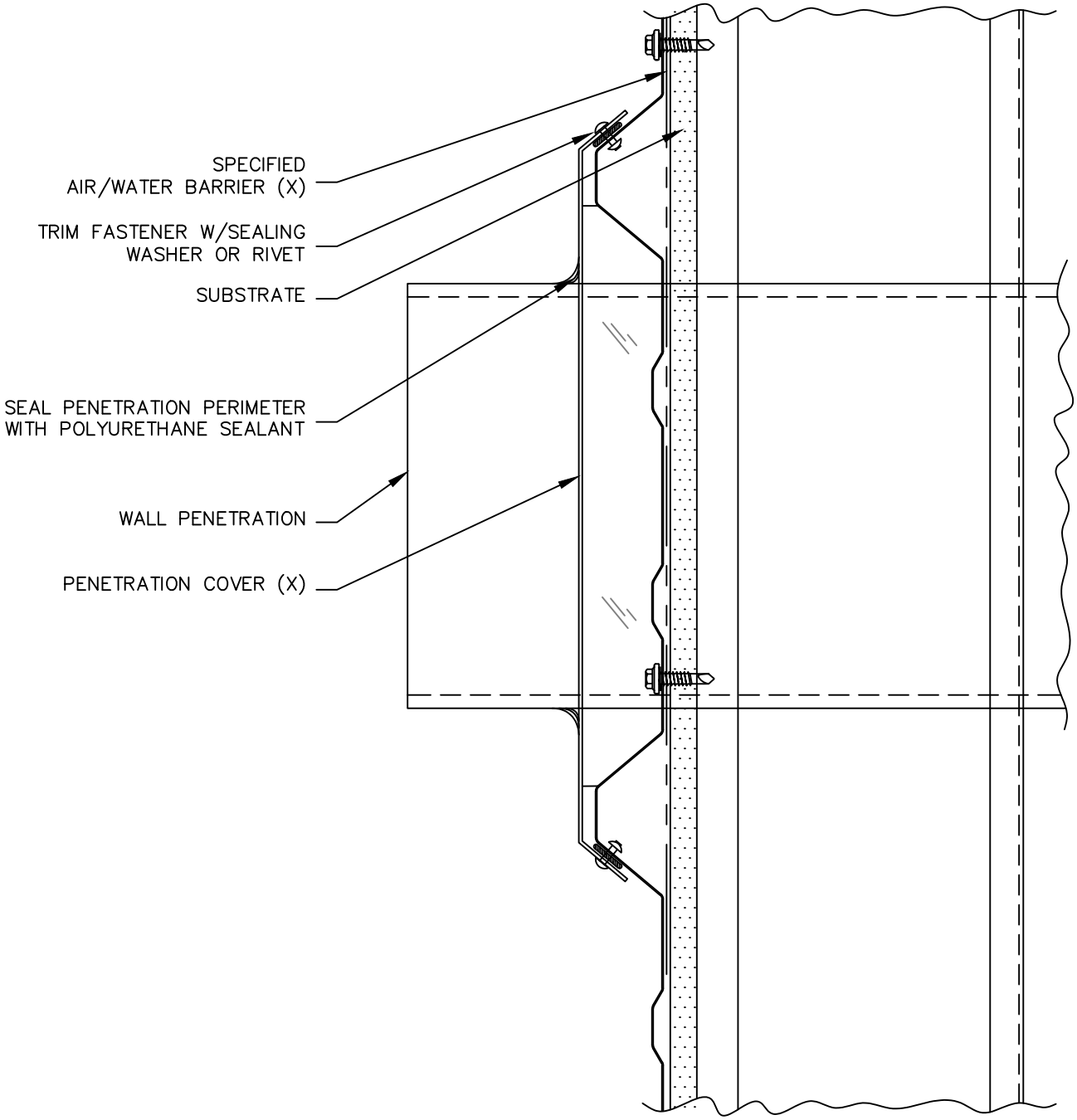

(X) – NOT BY AEP SPAN

AEP SPAN

PBR PANEL

PENETRATION (2D)

index

PBR-54

REV. 12/9/25

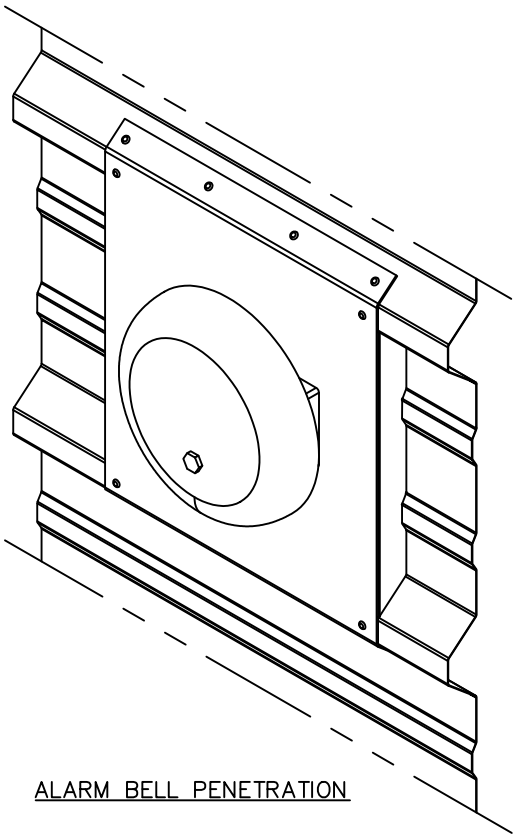

ALARM BELL PENETRATION

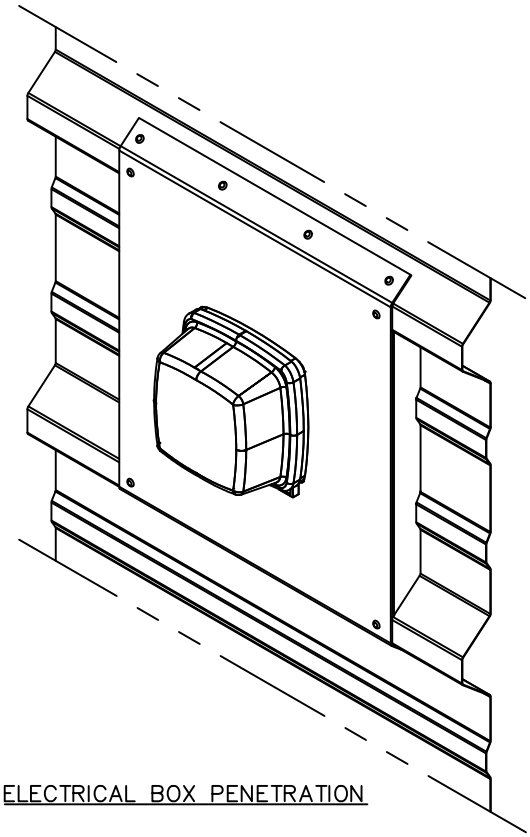

ELECTRICAL BOX PENETRATION

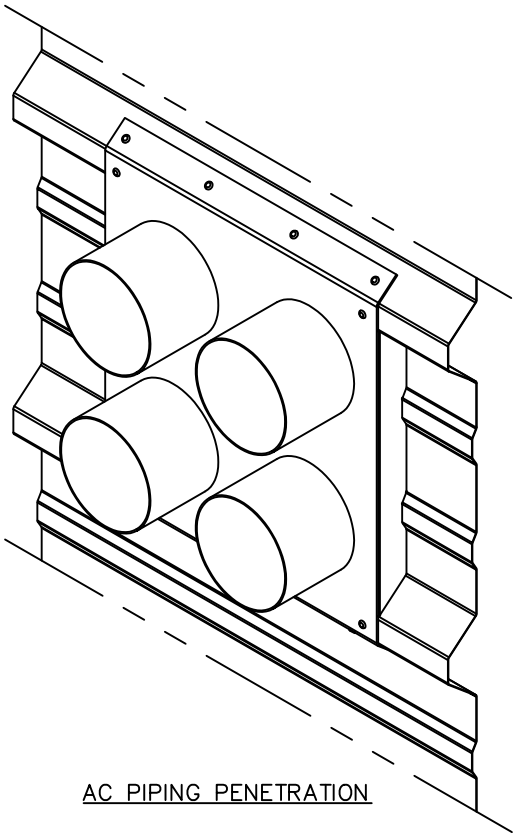

AC PIPING PENETRATION

AEP SPAN

PBR PANEL

PENETRATION (3D) EXAMPLES

index

PBR-55

REV. 12/9/25

MANUFACTURING FACILITY:

West Sacramento, California
2110 Enterprise Boulevard
West Sacramento, CA 95691

Tacoma, Washington
2141 Milwaukee Way
Tacoma, WA 98421

CUSTOMER SERVICE:
800-733-4955

Visit us at:
www.aepspan.com

AEP SPAN®

©2025 ASC Profiles LLC. All rights reserved.