Perception Collection®

(Horizontal Installation)
Installation Guide

Perception Collection®

(Horizontal Install.)
Installation Guide

- Table of Contents -

Section	Page
General Notes	*i*
Panel Details	*1*
Clips	*2*
Panel Closures	*3*
Closure Installation	*4*
Base	*5*
Sill	*6*
End Wall	*7*
Outside Corner	*8*
Inside Corner	*9*
Soffit (Front)	*10*
Soffit (Back)	*11*
End Splice (w/Trim)	*12*
Parapet	*13*
Door/Window (Head)	*14*
Door/Window (Jamb)	*15*
Door/Window (Sill)	*16*
Wall Penetration (3D)	*17*
Wall Penetration	*18*
Rigid Insulation	*19*

©2018 ASC Profiles. All rights reserved.

General Notes

The attached installation details are intended to be a design aid and do not depict all situations. Modifications are the responsibility of the designer/user and should take into account climate conditions such as wind and snow, governing code requirements, and the actual usage and maintenance of the structure.

Applications:

Perception Collection can be utilized as a wall panel installed in the vertical or horizontal orientation. It shall not be utilized for roof applications. Perception Collection can be used over solid substrates or over spaced supports. This installation guide depicts clip attached panels installed using flush mounted clips. Details for direct fastened panels or clip attached panels using standoff clips would be similar.

Flashings:

Where possible, flashings should be lapped away from prevailing winds. Certain flashings should be supported if it is likely that equipment (ladder, etc.) will be used against them. Check with AEP Span any time you intend to specify a prefinished flashing in a gauge or finish different than the Perception Collection. It is good practice to specify that all flashings be of the same material (gauge, color, finish) as the roof panels to ensure long-term durability. Field-painted flashings rarely equal the durability and colorfastness of factory baked-on paint systems. The enclosed details have minimized the use of exposed fasteners where possible. The edges of flashings have also been shown hemmed to strengthen and to minimize the exposure of cut edges.

Flashing design and fabrication is generally the responsibility of the contractor. For convenience, we have provided some typical flashing drawings on our website at

www.aepspan.com/files/Arch_Trims_Flashings.pdf

Applicable Perception Collection flashing part numbers are referenced within this installation guide. Note that flashing shapes and dimensions may vary greatly based on project requirements. Installation details and flashings referenced within are for general design guidance only.

Condensation, Insulation, & Ventilation:

It is the designer's responsibility to determine the need and composition of condensation control materials including insulation and vapor retarders, as well as ventilation requirements. Metal wall products are susceptible to condensation and its control should be carefully considered.

Thermal Movement:

Both panels and flashings must allow for thermal movement (expansion and contraction) of the materials, especially where long lengths are used. Appropriate gaps or provisions must be provided to accommodate thermal movement.

Oil Canning:

Flat metal surfaces often display waviness commonly referred to as 'oil canning'. This can be caused by variations in raw material, processing variations, product handling, or variations in the installation substrate. Oil canning is a characteristic, not a defect, of panels manufactured from light-gauge metal. To reduce potential for oil canning, substrates should not deviate from a flat plane more than 1/4 inch in 20 feet, or 1/8 inch in 5 feet. Oil canning is not a cause for panel rejection. Additional technical information is available upon request.

References:

The Sheet Metal and Air Conditioning Contractors' National Association Inc. (SMACNA) manual is an excellent reference for sheet metal contractors. It's guidelines for underlayments, gutter and downspout size requirements, and expansion/contraction of metals and flashing joints should be followed.

Technical Assistance:

Contact your AEP Span Sales Representative for additional information.

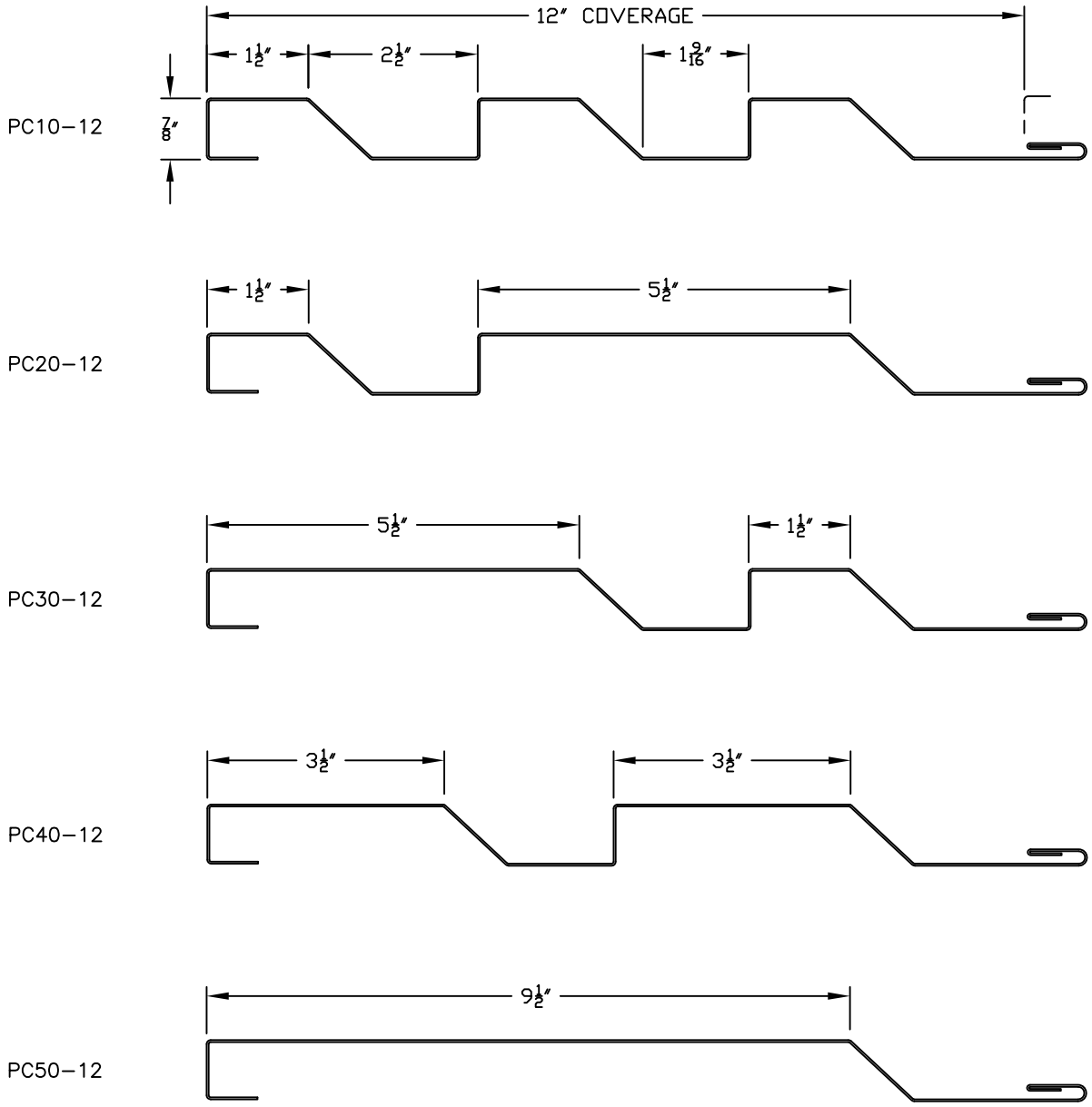

PANEL INTERLOCK OPTIONS

DIRECT FASTENED
('D' P/N SUFFIX)

CLIP ATTACHED
('C' P/N SUFFIX)

MATERIAL:
STEEL: 22 & 24GA (20GA NON–STD.)
AVAILABLE LENGTHS: 5'–20'

AEP SPAN®

PERCEPTION COLLECTION

HORIZONTAL INSTALL.

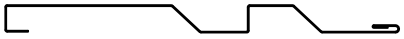

PANEL DETAILS

index

PCH-01

REV. 8/18/16

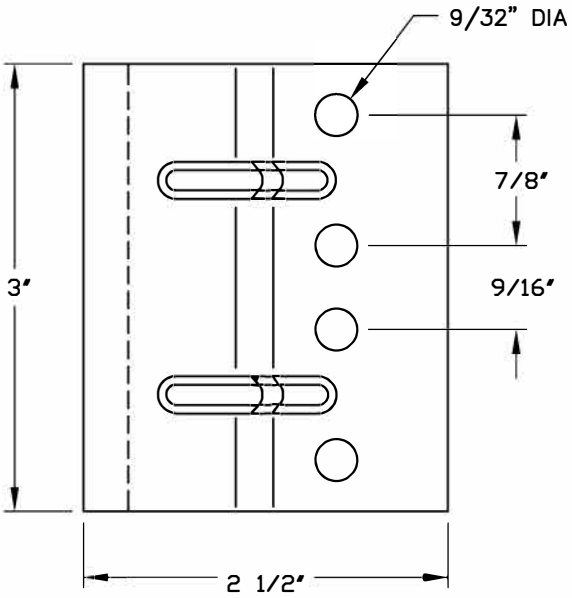

FLUSH CLIP
P/N: #WALLCLP

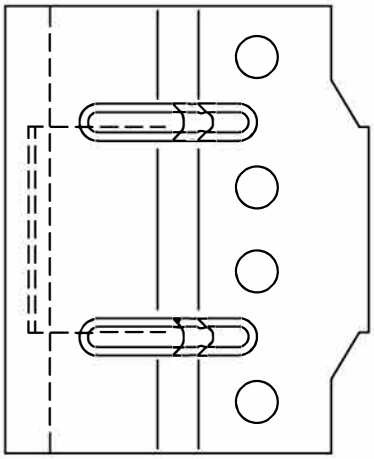

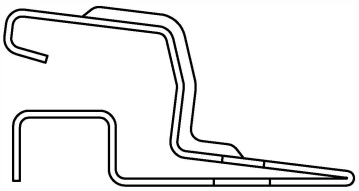

STANDOFF CLIP
P/N: #WALLCLP0.5

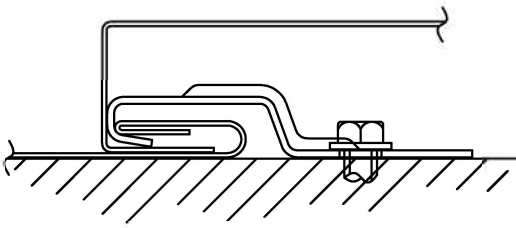

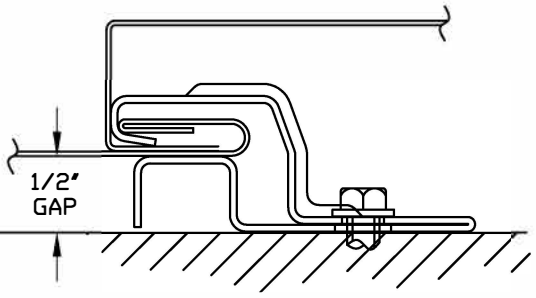

INSTALLED POSITION

AEP SPAN®

PERCEPTION COLLECTION

HORIZONTAL INSTALL.

CLIPS

index

PCH-02

REV. 8/18/16

CLPC–1P

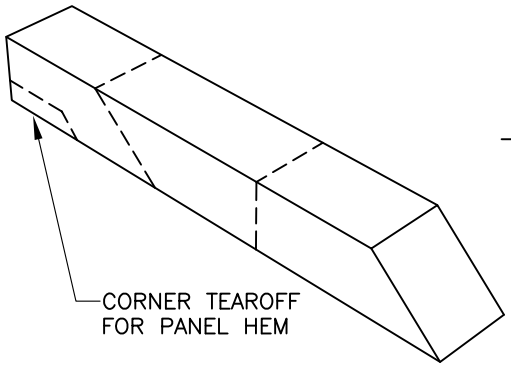

CLPC–2P

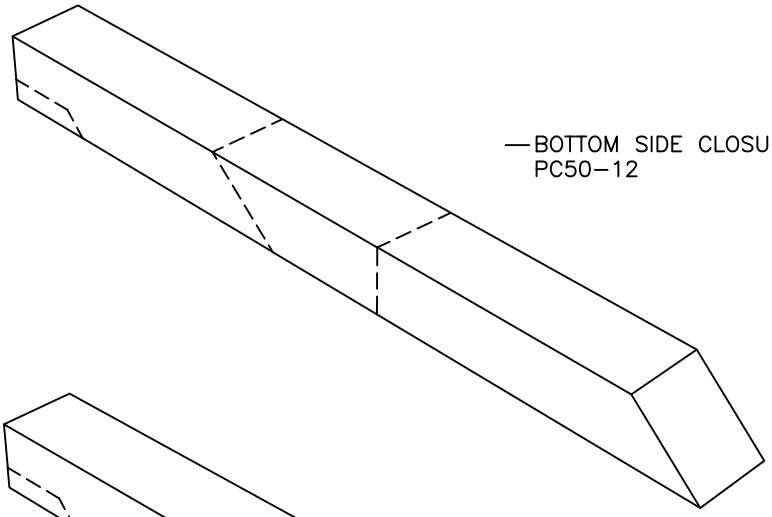

CLPC–3P

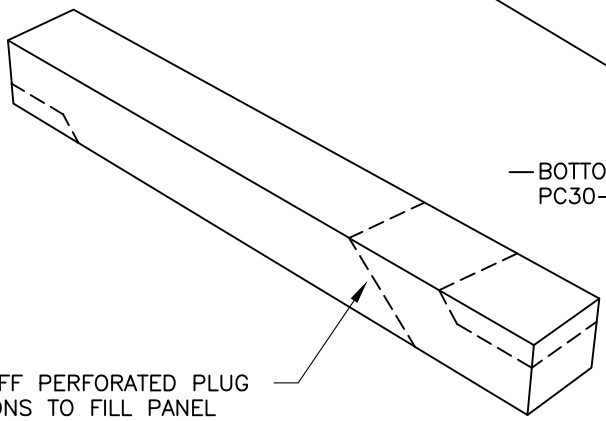

NOTE: APPLICATIONS UTILIZING STANDOFF CLIP ALSO REQUIRE UNIVERSAL CLOSURE STRIP (AEP #CLEM1x19.68 OR EQUIV.) TO SEAL OFF ADDITIONAL 1/2" PANEL–TO–SUBSTRATE GAP.

AEP SPAN®

PERCEPTION COLLECTION

HORIZONTAL INSTALL.

PANEL CLOSURES

index

PCH-03

REV. 8/18/16

TOP SIDE CLOSURE INSTALLATION

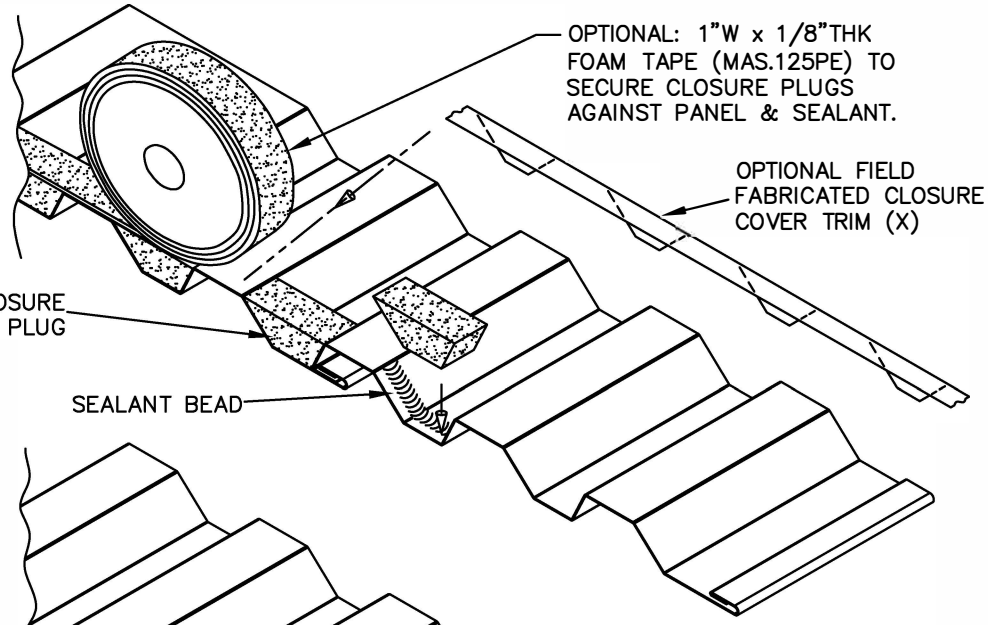

BOTTOM SIDE CLOSURE INSTALLATION (FLUSH MOUNTED PANELS)

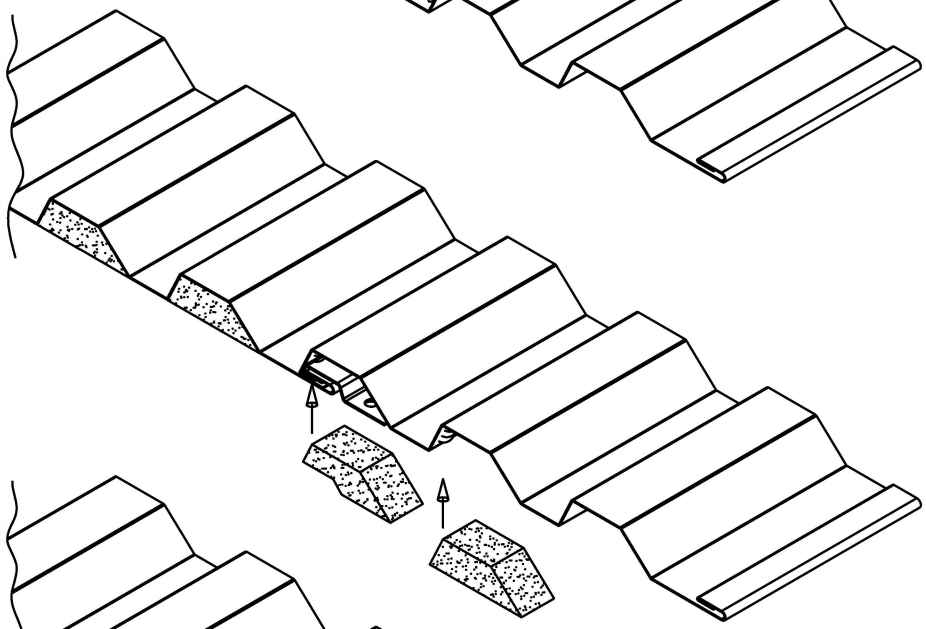

BOTTOM SIDE CLOSURE INSTALLATION (PANELS WITH STANDOFF CLIP)

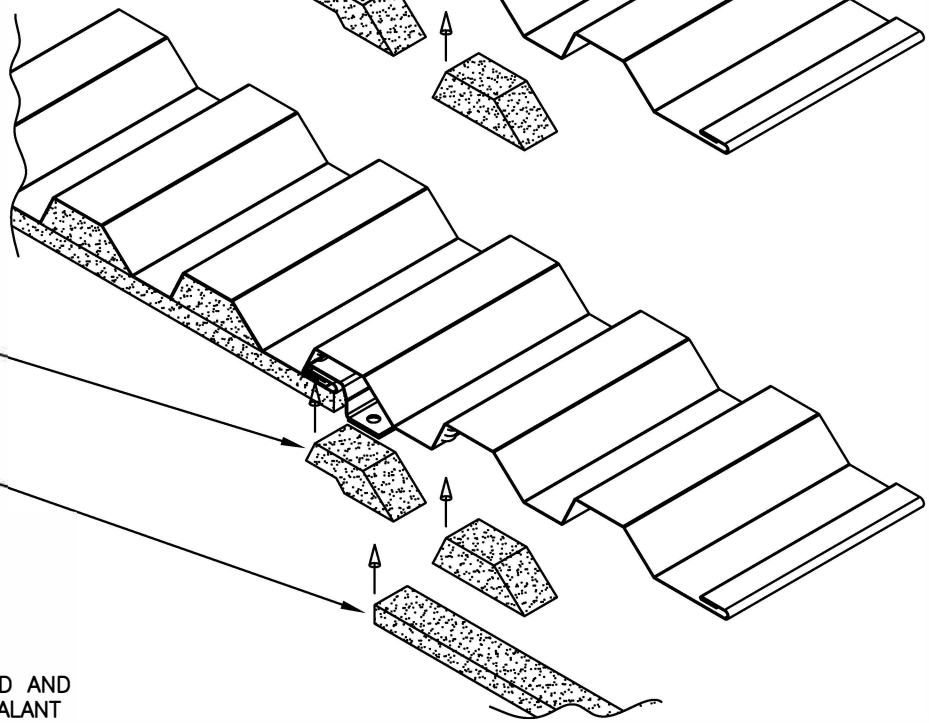

NOTES:
– ALL CLOSURE PLUGS SECURED AND SEALED WITH POLYURETHANE SEALANT
(X) – NOT BY AEP SPAN

AEP SPAN®

PERCEPTION COLLECTION

HORIZONTAL INSTALL.

CLOSURE INSTALLATION

index

PCH-04

REV. 6/20/17

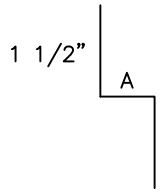

TRIM	DIM A	USAGE
ZC225	7/8"	FLUSH MOUNT
ZC228	1 3/8"	W/0.5" STANDOFF

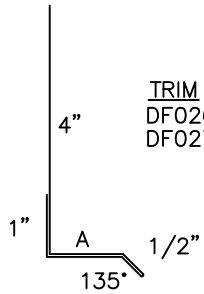

TRIM	DIM A	USAGE
DF026	1 1/4"	FLUSH MOUNT
DF027	1 3/4"	W/0.5" STANDOFF

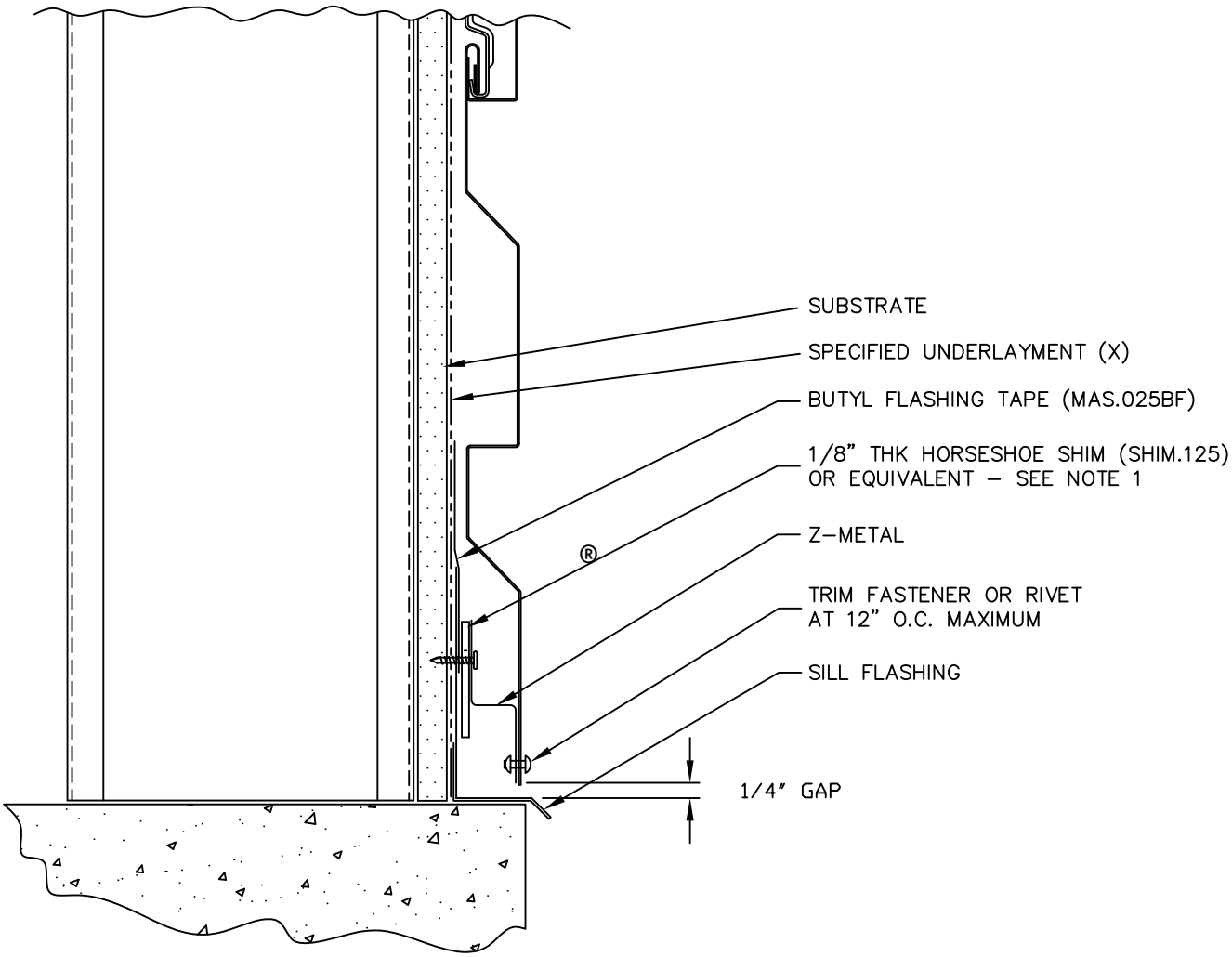

1. SHIM USED FOR MOISTURE CONTROL (DRAINAGE) IN FLUSH MOUNT APPLICATIONS.
(X) – NOT BY AEP SPAN

PERCEPTION COLLECTION PANELS ARE INSTALLED FROM GROUND TO EAVE.

AEP SPAN®

PERCEPTION COLLECTION

HORIZONTAL INSTALL.

BASE

index

PCH-05

REV. 6/20/17

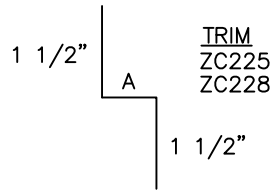

TRIM	DIM A	USAGE
ZC225	7/8"	FLUSH MOUNT
ZC228	1 3/8"	W/0.5" STANDOFF

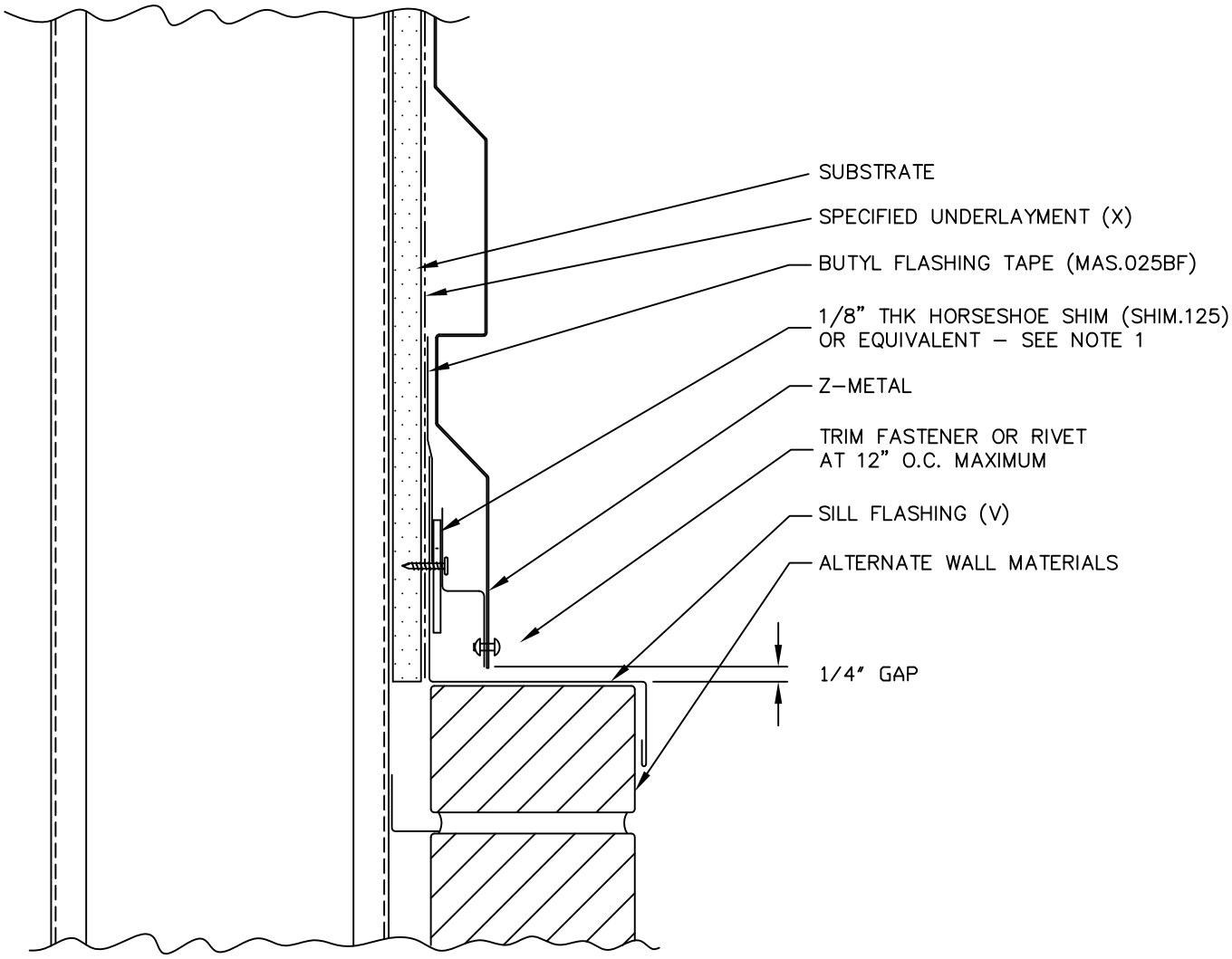

1. SHIM USED FOR MOISTURE CONTROL (DRAINAGE) IN FLUSH MOUNT APPLICATIONS.
(X) – NOT BY AEP SPAN
(V) – DIMENSIONS VARY BASED ON PROJECT CONDITIONS

AEP SPAN®

PERCEPTION COLLECTION

HORIZONTAL INSTALL.

SILL

index

PCH-06

REV. 6/20/17

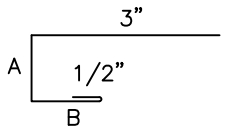

TRIM	DIM A	DIM B	USAGE
JT108	1 1/8"	1 1/8"	FLUSH MOUNT
JT112	1 5/8"	1 1/2"	W/0.5" STANDOFF

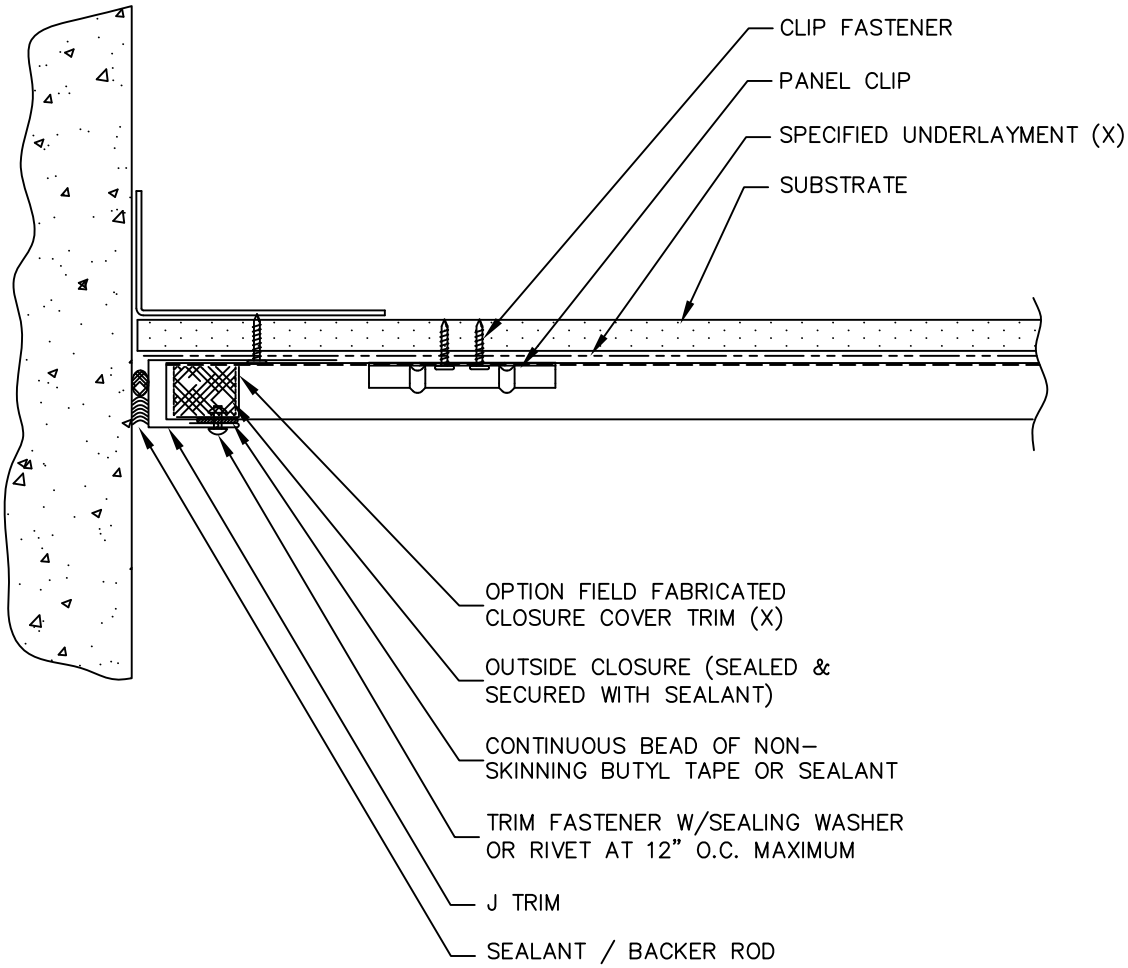

(X) – NOT BY AEP SPAN

AEP SPAN®

PERCEPTION COLLECTION

HORIZONTAL INSTALL.

END WALL

index

PCH-07

REV. 6/20/17

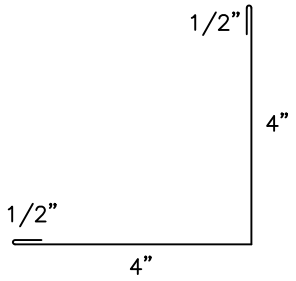

OC111

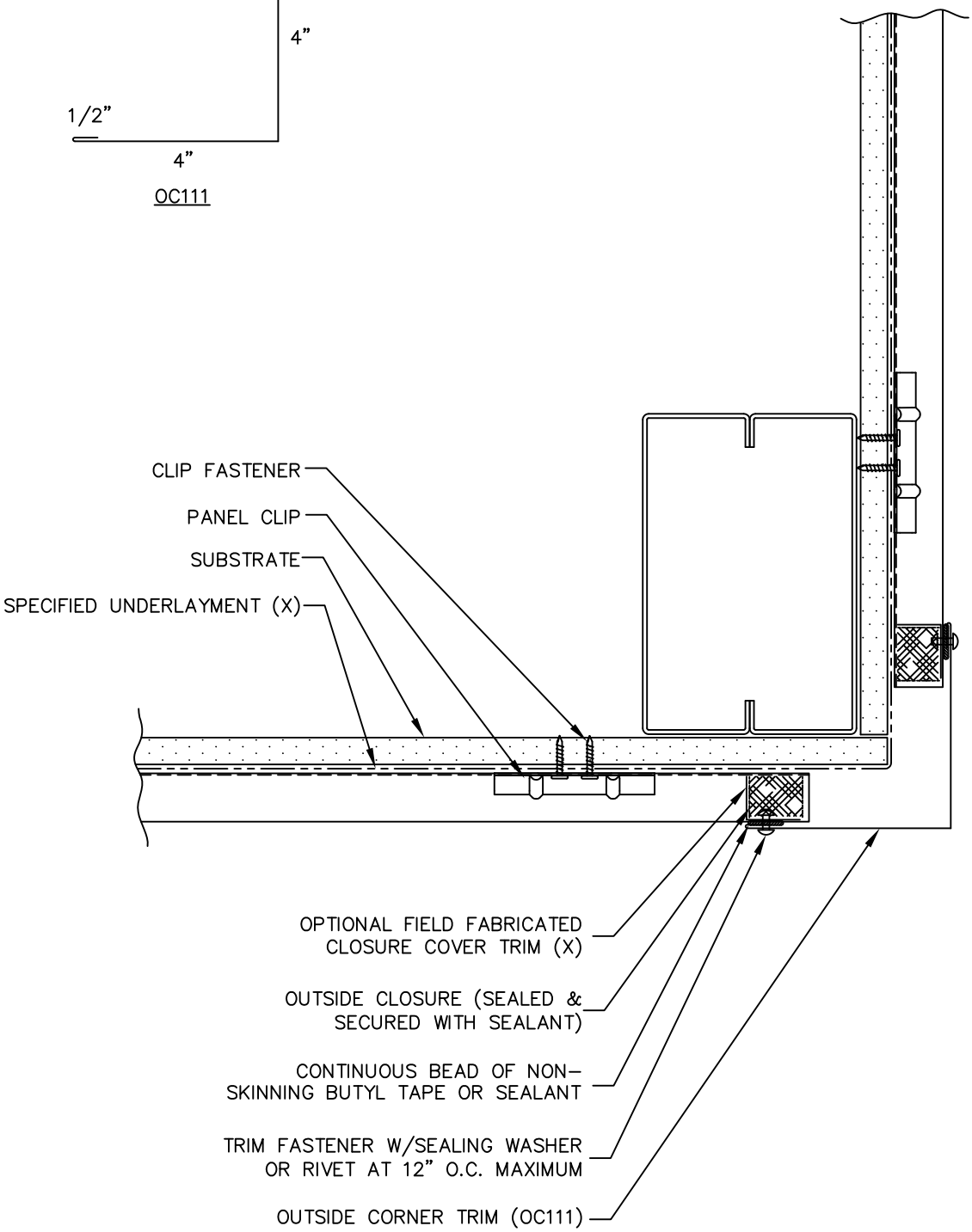

(X) – NOT BY AEP SPAN

AEP SPAN®

PERCEPTION COLLECTION

HORIZONTAL INSTALL.

OUTSIDE CORNER

index

PCH-08

REV. 6/20/17

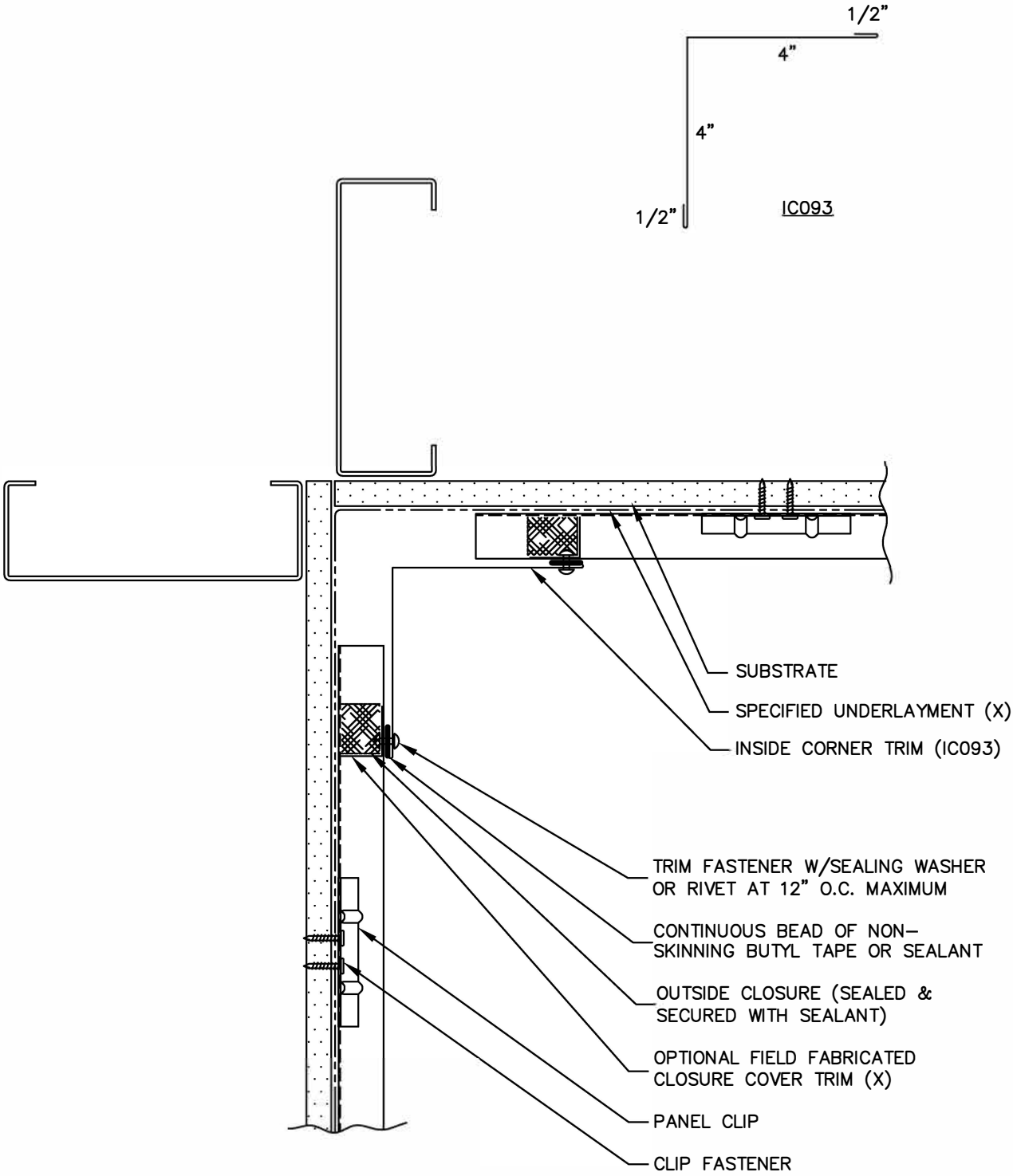

(X) – NOT BY AEP SPAN

AEP SPAN®

PERCEPTION COLLECTION

HORIZONTAL INSTALL.

INSIDE CORNER

index

PCH-09

REV. 6/20/17

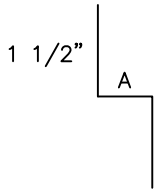

TRIM	DIM A	USAGE
ZC225	7/8"	FLUSH MOUNT
ZC228	1 3/8"	W/0.5" STANDOFF

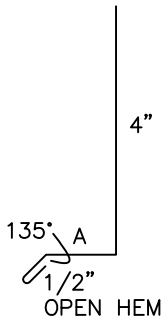

TRIM	DIM A	USAGE
DF032	1 1/8"	FLUSH MOUNT
DF033	1 5/8"	W/0.5" STANDOFF

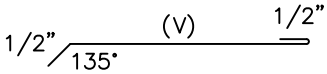

COVER TRIM

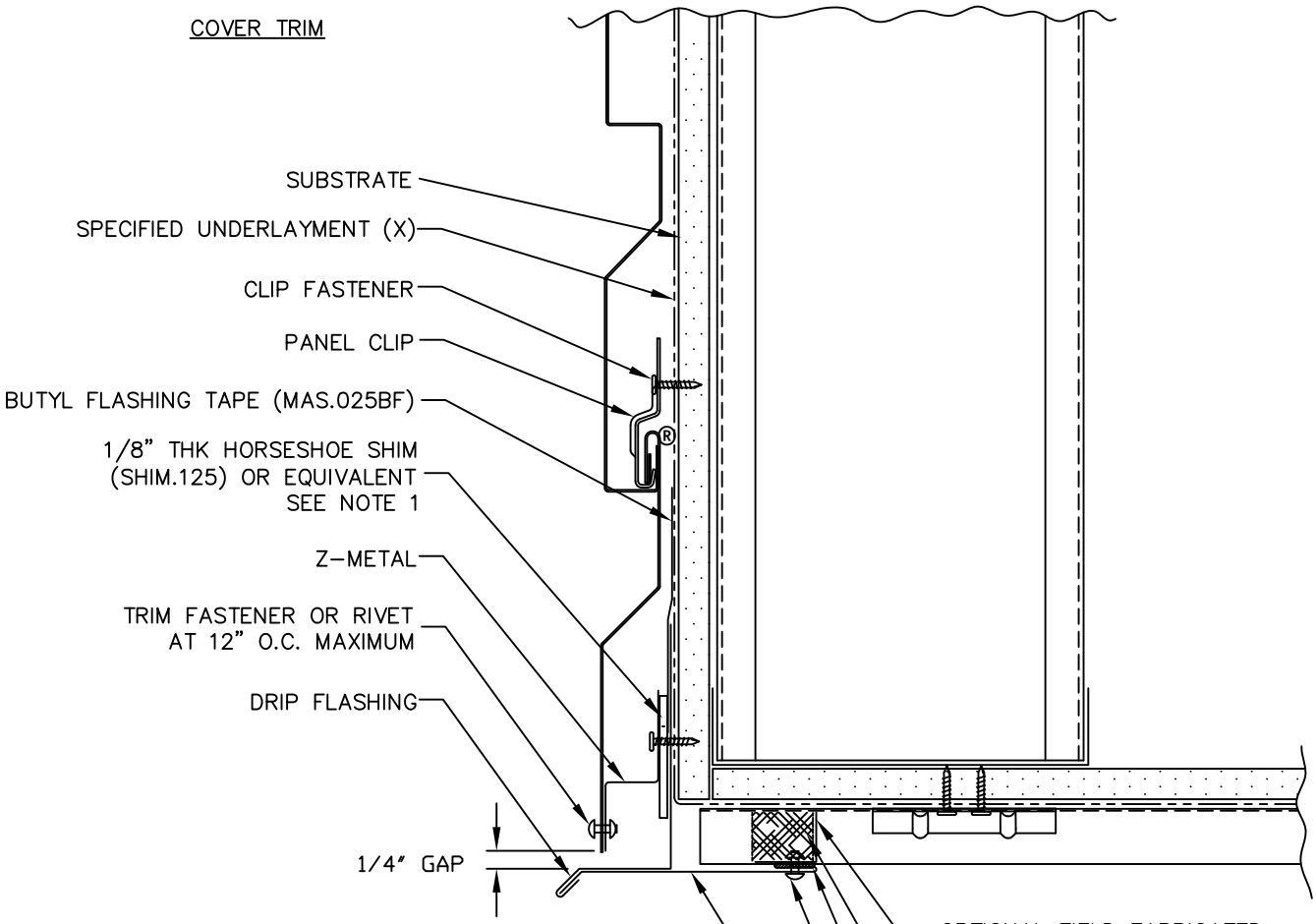

1. SHIM USED FOR MOISTURE CONTROL (DRAINAGE) IN FLUSH MOUNT APPLICATIONS.
(X) – NOT BY AEP SPAN
(V) – DIMENSIONS VARY BASED ON PROJECT CONDITIONS.

AEP SPAN®

PERCEPTION COLLECTION

HORIZONTAL INSTALL.

SOFFIT (FRONT)

index

PCH-10

REV. 6/20/17

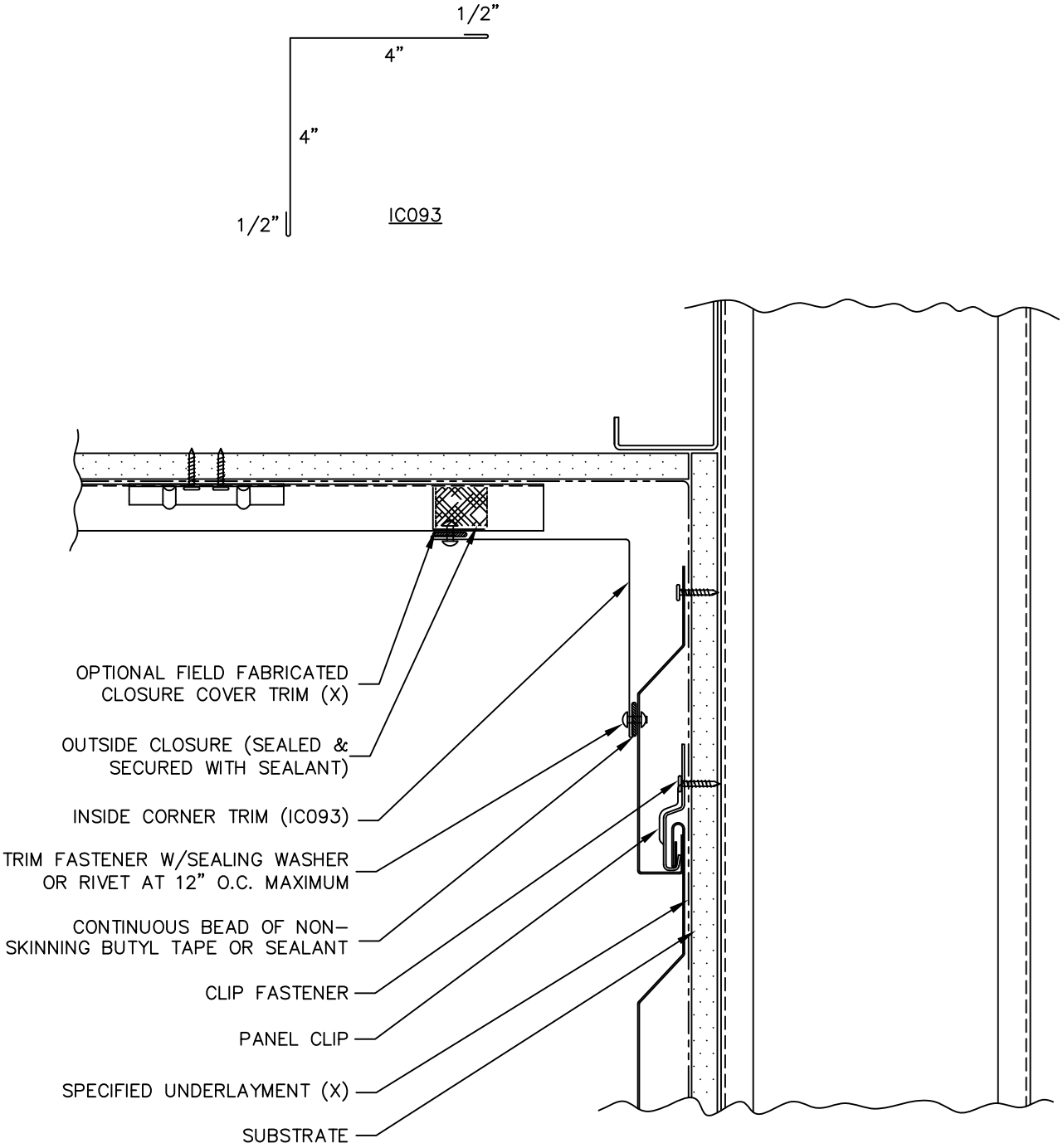

(X) – NOT BY AEP SPAN

AEP SPAN®

PERCEPTION COLLECTION

HORIZONTAL INSTALL.

SOFFIT (BACK)

index

PCH-11

REV. 6/20/17

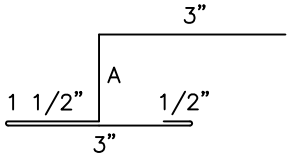

TRIM	DIM A	USAGE
MT110	1 1/8"	FLUSH MOUNT
MT114	1 5/8"	W/0.5" STANDOFF

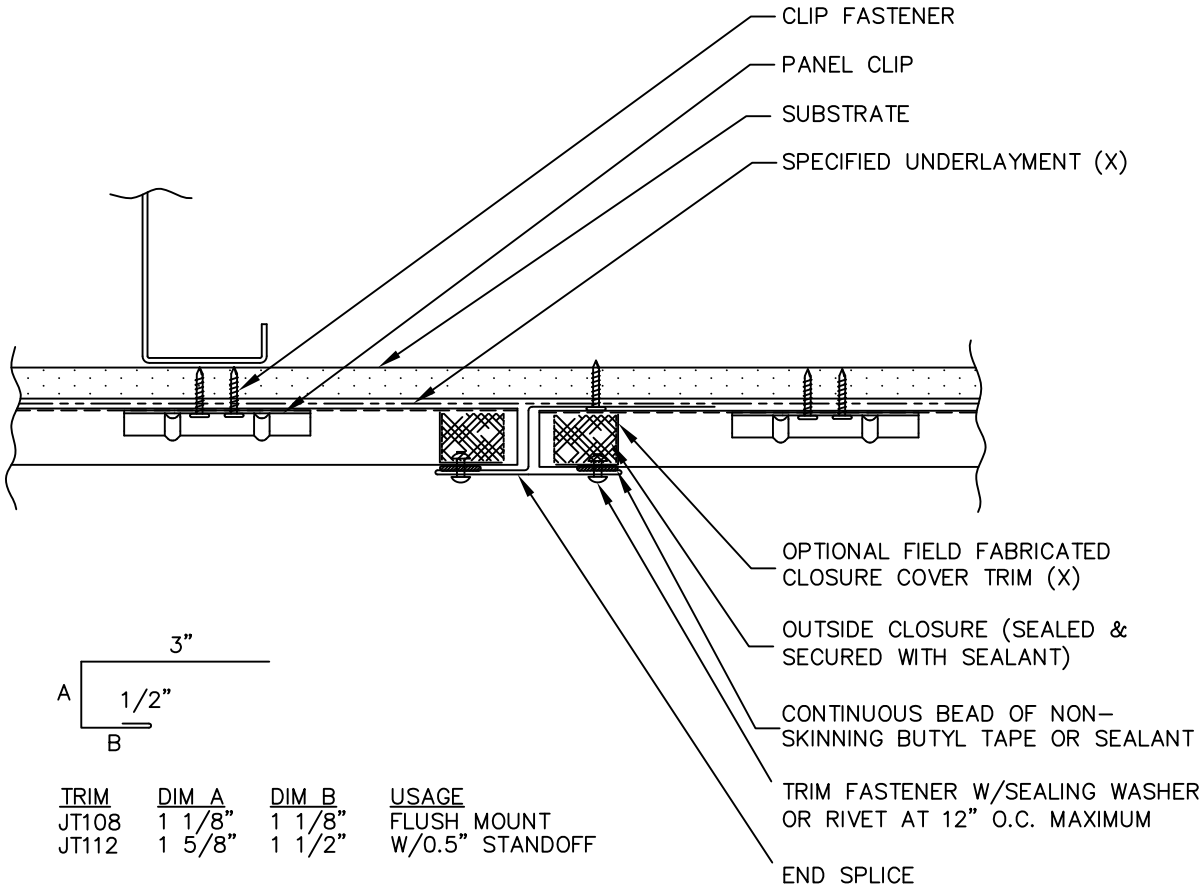

TRIM	DIM A	DIM B	USAGE
JT108	1 1/8"	1 1/8"	FLUSH MOUNT
JT112	1 5/8"	1 1/2"	W/0.5" STANDOFF

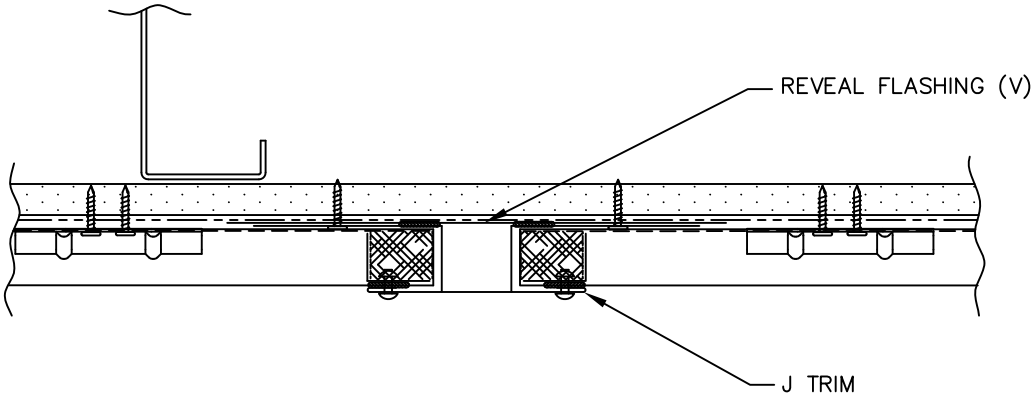

(X) – NOT BY AEP SPAN
(V) – DIMENSIONS VARY BASED ON PROJECT CONDITIONS

AEP SPAN®

PERCEPTION COLLECTION

HORIZONTAL INSTALL.

END SPLICE (W/TRIM)

index

PCH-12

REV. 6/20/17

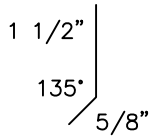

TC209

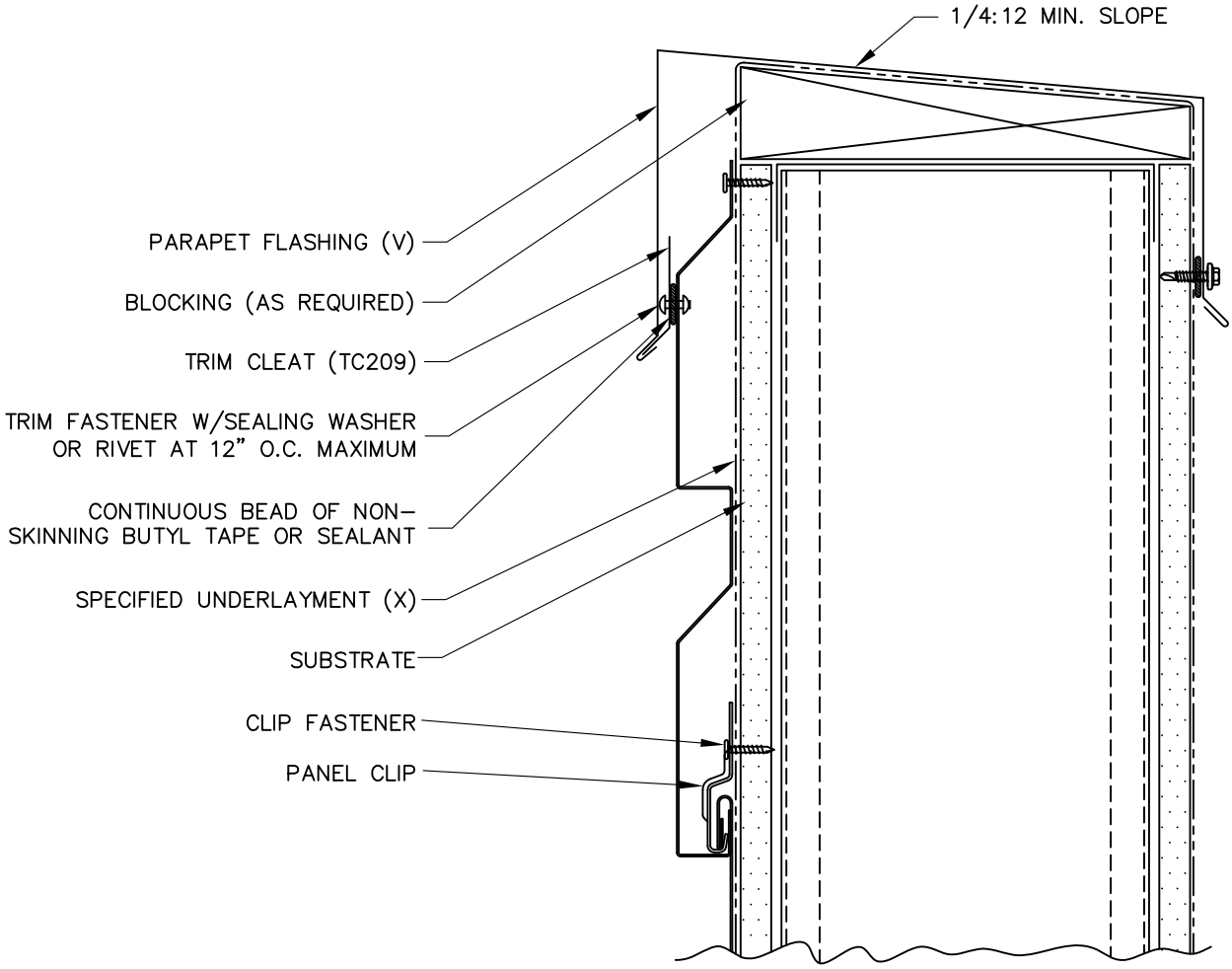

(X) – NOT BY AEP SPAN
(V) – DIMENSIONS VARY BASED ON PROJECT CONDITIONS

AEP SPAN®

PERCEPTION COLLECTION

HORIZONTAL INSTALL.

PARAPET

index

PCH-13

REV. 11/16/18

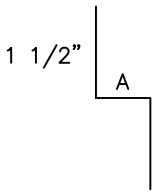

TRIM	DIM A	USAGE
ZC225	7/8"	FLUSH MOUNT
ZC228	1 3/8"	W/0.5" STANDOFF

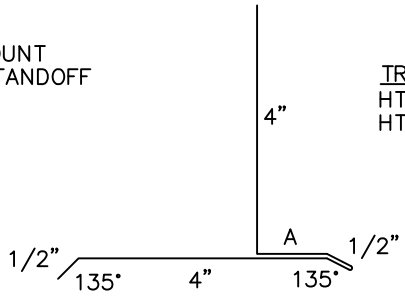

TRIM	DIM A	USAGE
HT093	1 1/8"	FLUSH MOUNT
HT102	1 5/8"	W/0.5" STANDOFF

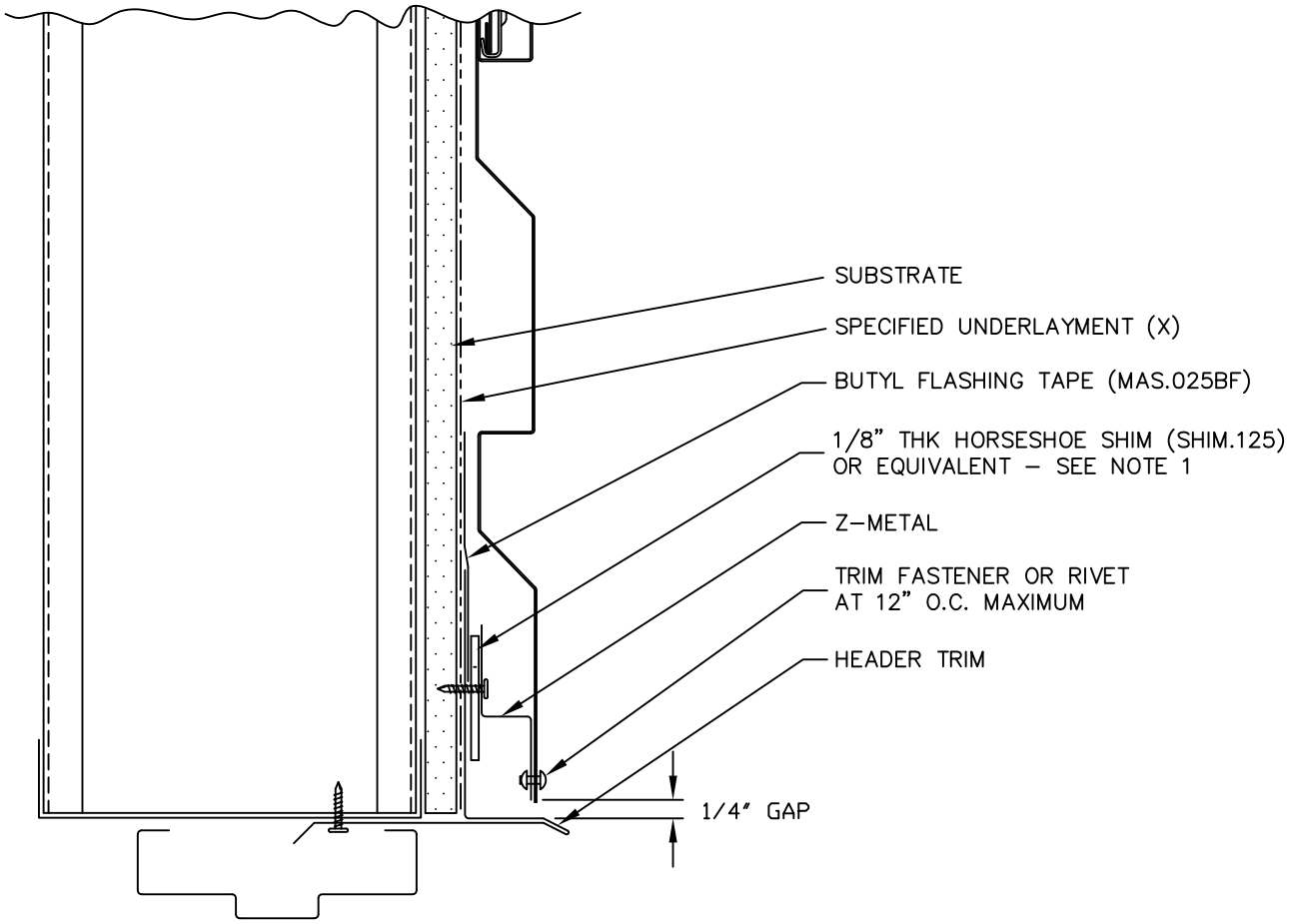

1. SHIM USED FOR MOISTURE CONTROL (DRAINAGE) IN FLUSH MOUNT APPLICATIONS.
(X) – NOT BY AEP SPAN

AEP SPAN®

PERCEPTION COLLECTION

HORIZONTAL INSTALL.

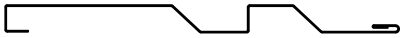

DOOR / WINDOW (HEAD)

index

PCH-14

REV. 6/20/17

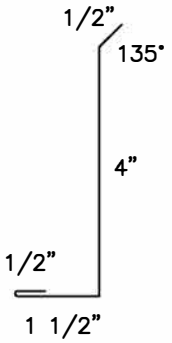

WC217

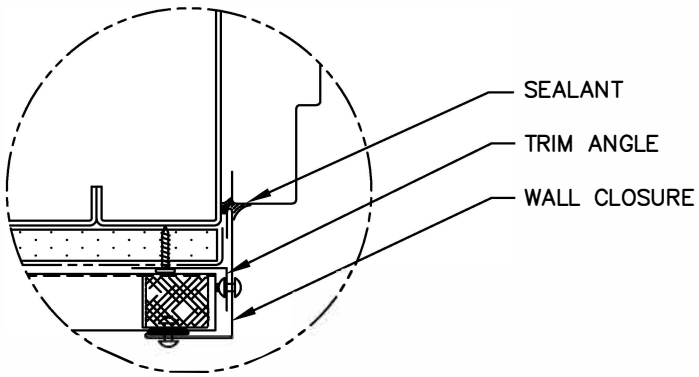

ALTERNATE DETAIL

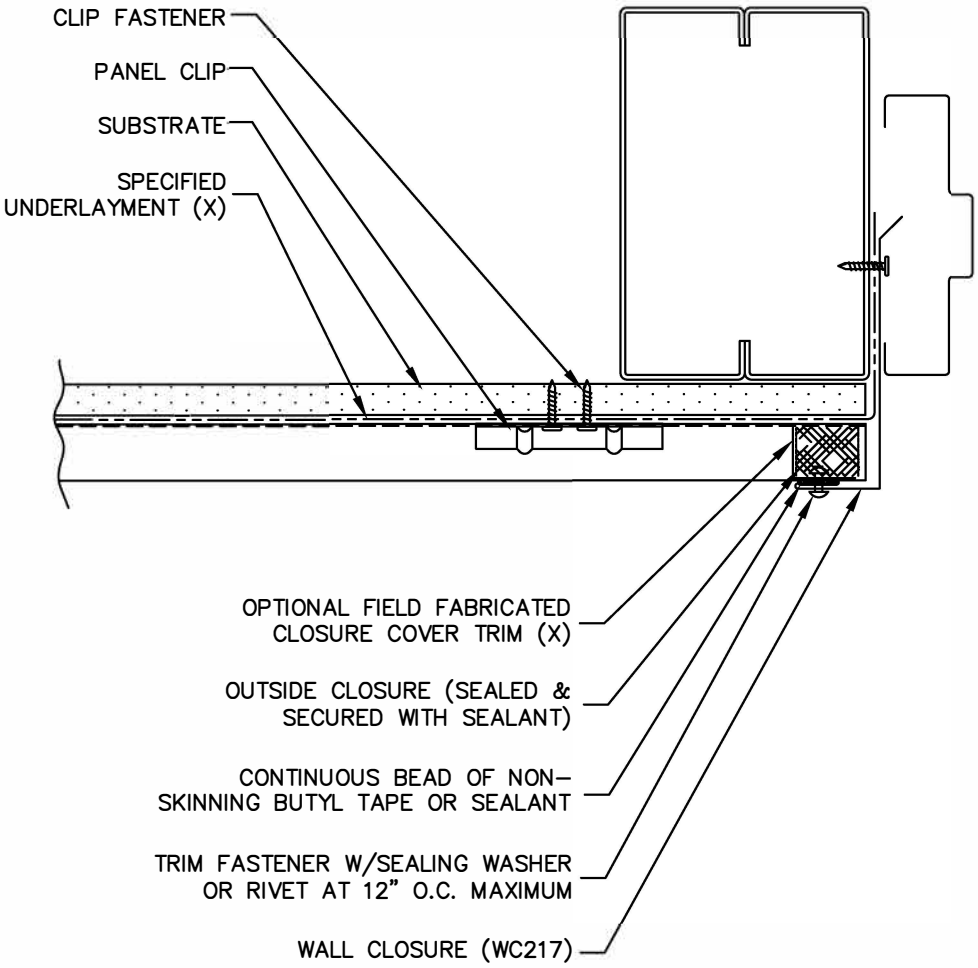

(X) – NOT BY AEP SPAN

AEP SPAN®

PERCEPTION COLLECTION

HORIZONTAL INSTALL.

DOOR / WINDOW (JAMB)

index

PCH-15

REV. 6/20/17

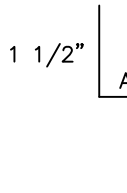

TRIM	DIM A	USAGE
ZC225	7/8"	FLUSH MOUNT
ZC228	1 3/8"	W/0.5" STANDOFF

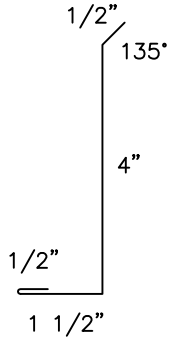

WC217

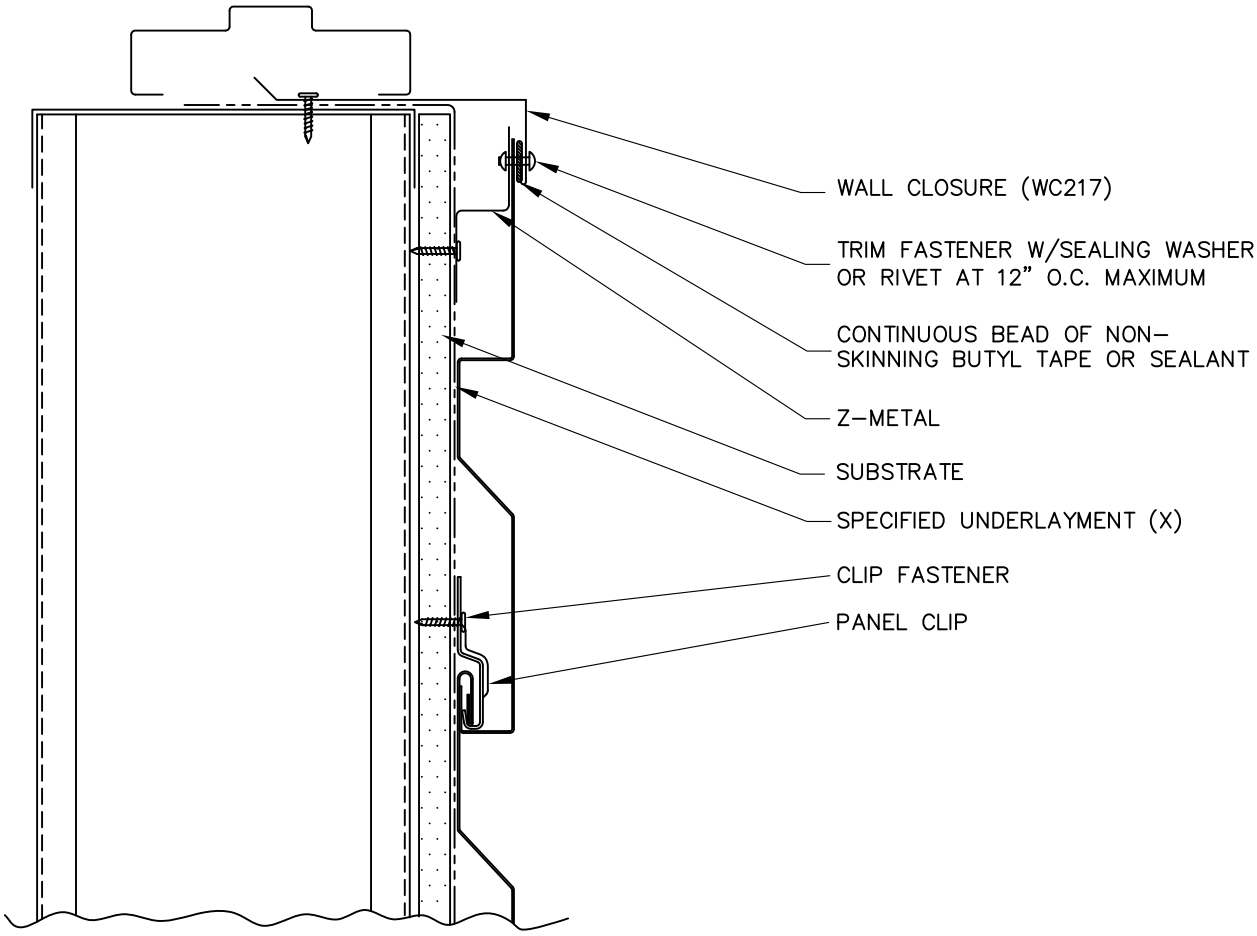

(X) – NOT BY AEP SPAN

AEP SPAN®

PERCEPTION COLLECTION

HORIZONTAL INSTALL.

DOOR / WINDOW (SILL)

index

PCH-16

REV. 8/18/16

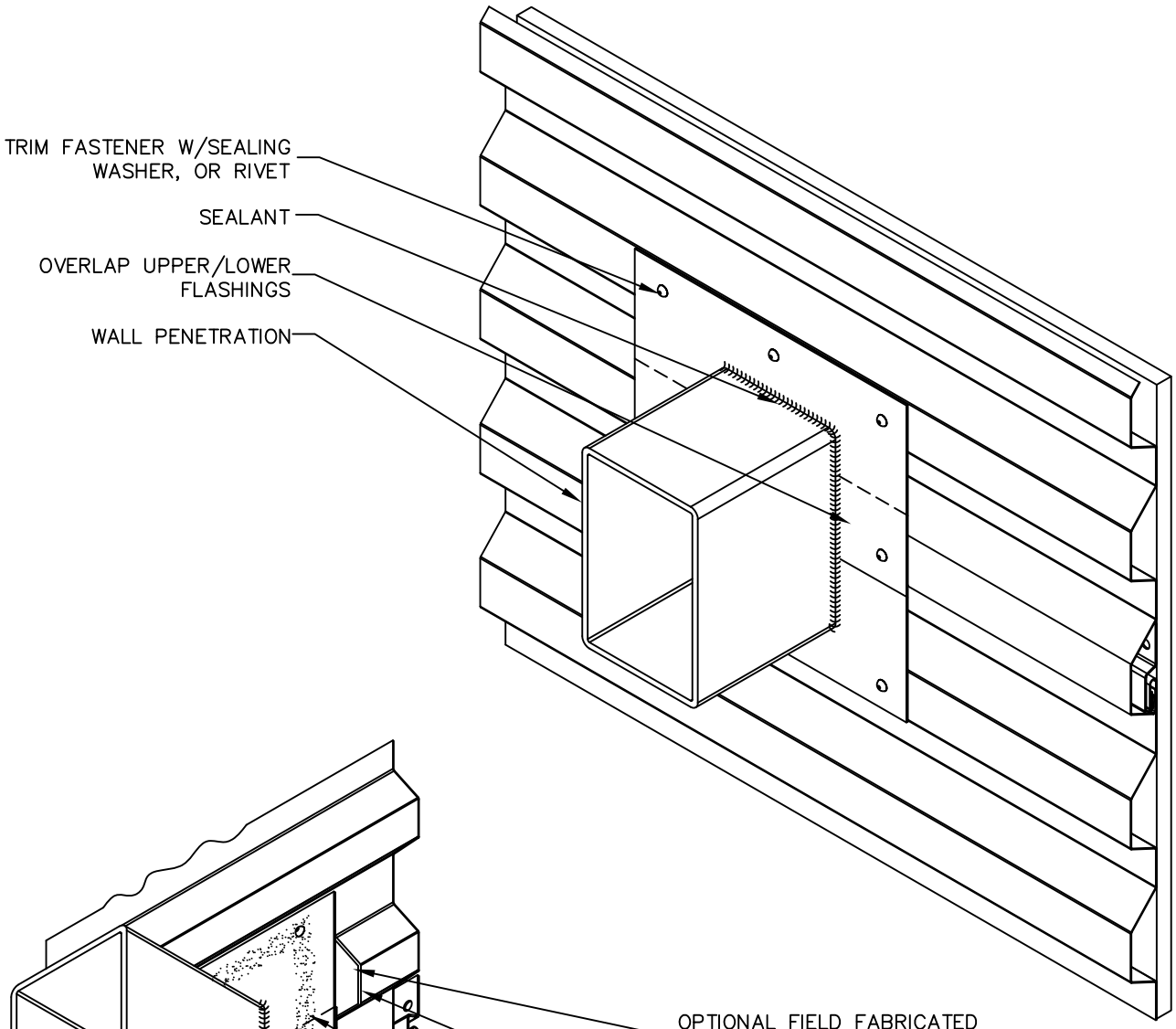

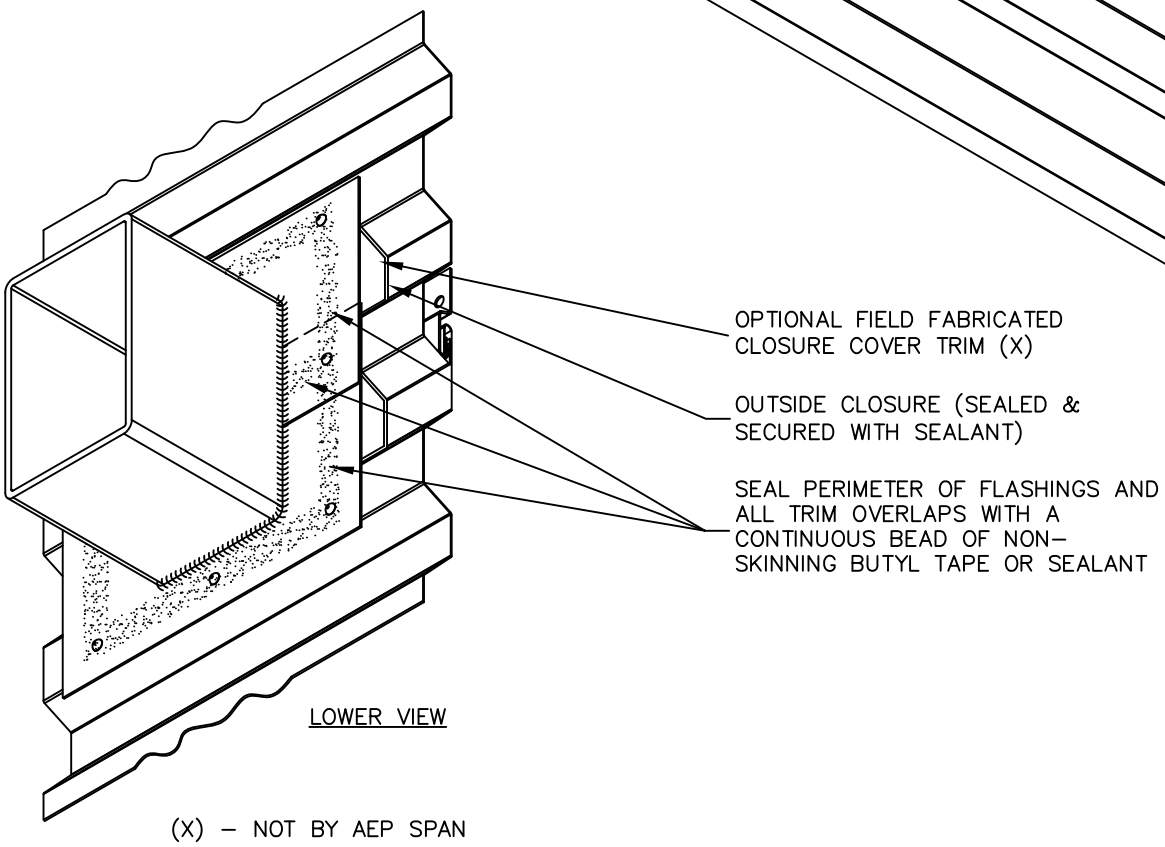

(X) – NOT BY AEP SPAN

AEP SPAN®

PERCEPTION COLLECTION

HORIZONTAL INSTALL.

WALL PENETRATION (3D)

index

PCH-17

REV. 6/20/17

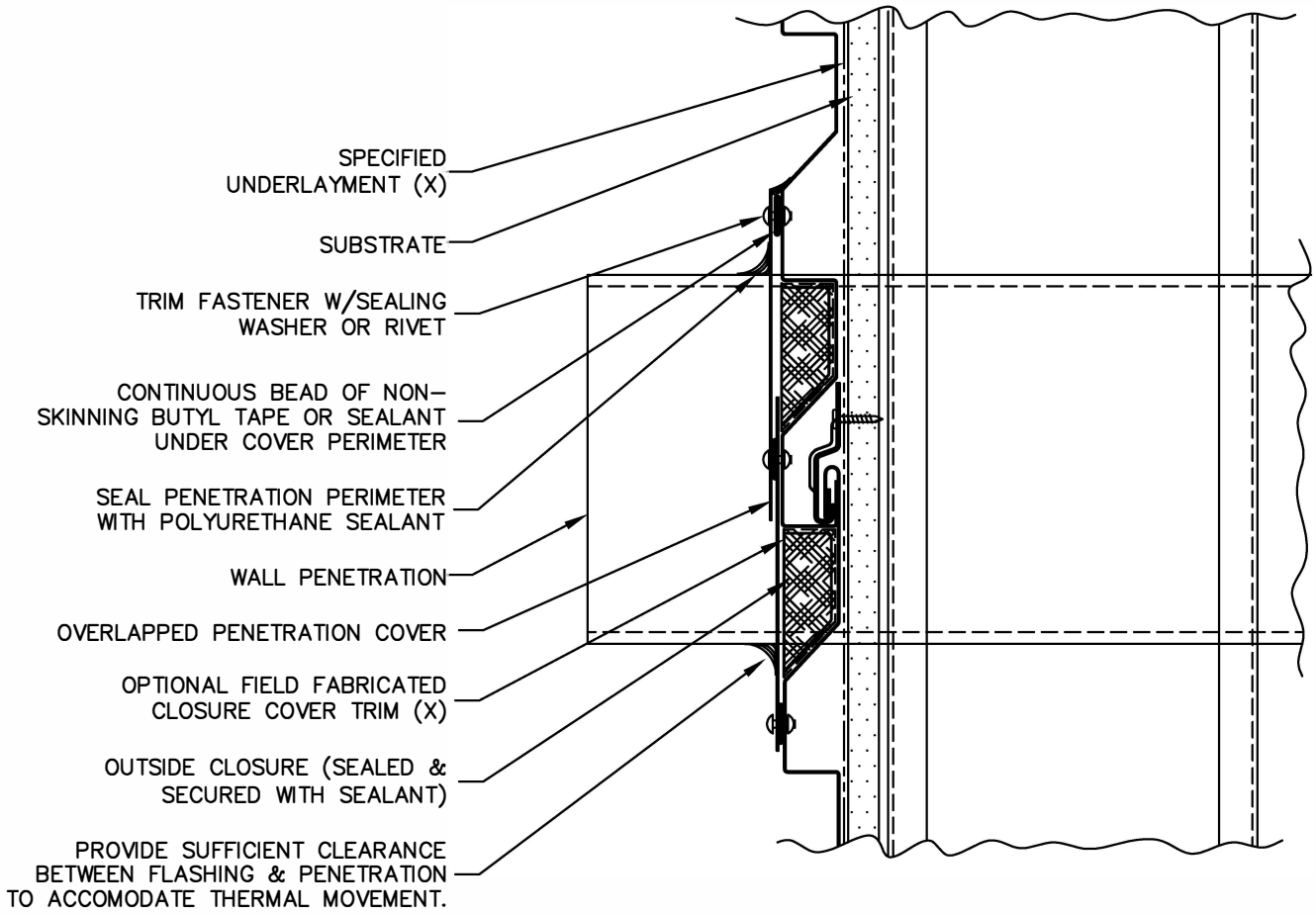

(X) – NOT BY AEP SPAN

AEP SPAN®

PERCEPTION COLLECTION

HORIZONTAL INSTALL.

WALL PENETRATION

index

PCH-18

REV. 6/20/17

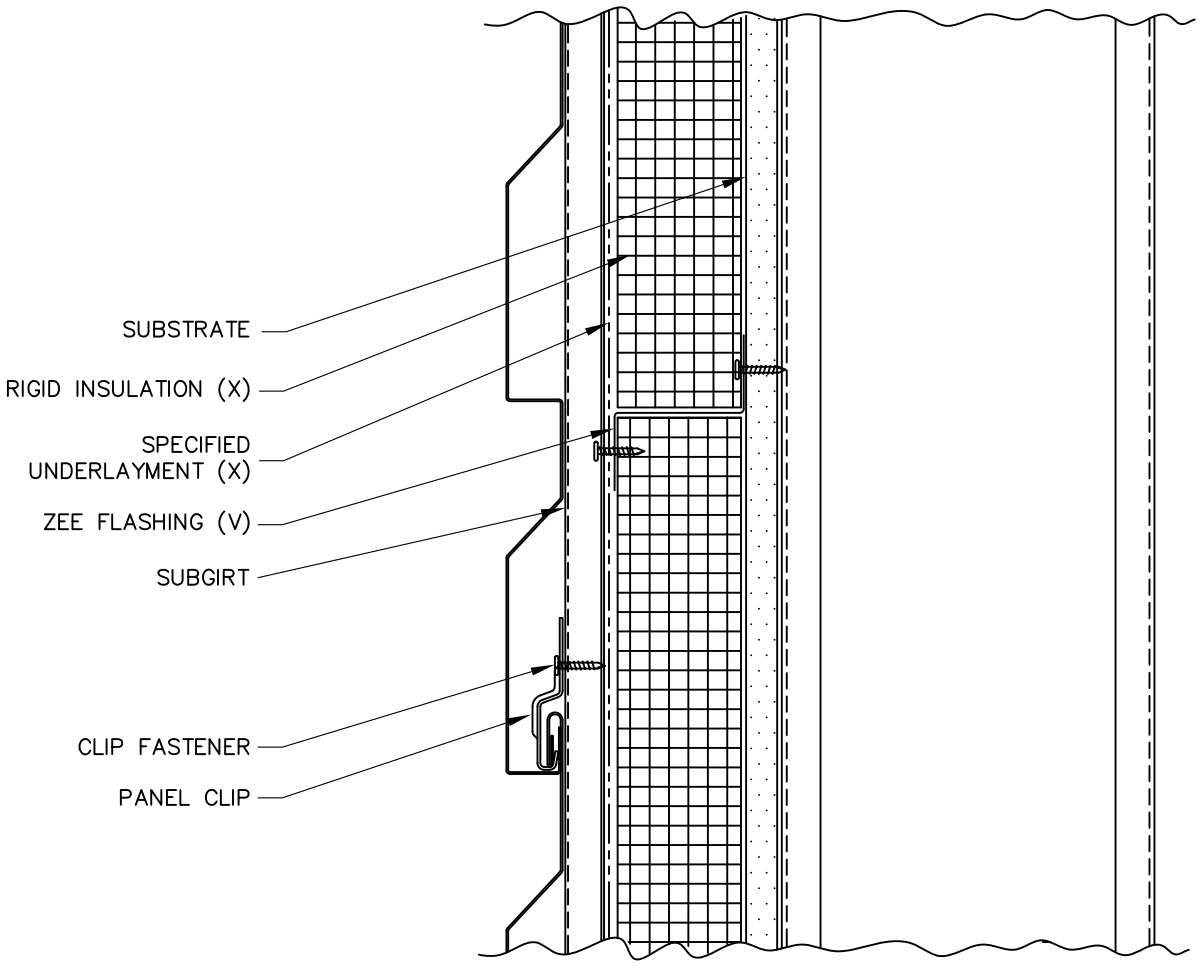

(X) – NOT BY AEP SPAN
(V) – DIMENSIONS AND GAGE VARY BASED ON PROJECT CONDITIONS

AEP SPAN®

PERCEPTION COLLECTION
HORIZONTAL INSTALL.

RIGID INSULATION

index

PCH-19

REV. 8/18/16

MAN FACT RING FACI IT :

Tacoma, Washington
2141 Milwaukee Way
Tacoma, WA 8421

CORPORATE HEAD ARTERS:

ASC Profiles LLC
2110 Enterprise Boulevard
West Sacramento, CA 5 1

C STOMER SER ICE:
800-733-4955

isit us at:
www.aepspan.com

©2018 ASC Profiles C. All rights reserved.