Prestige Series®

(Horizontal Install.)
Installation Guide

Prestige Series®

(Horizontal Install.)
Installation Guide

- Table of Contents -

Section	Page
General Notes	*i*
Panel Details	*1*
Clip	*2*
Closures	*3*
Base	*4*
Sill	*5*
End Wall	*6*
Outside Corner	*7*
Inside Corner	*8*
Soffit (Front)	*9*
Soffit (Back)	*10*
End Splice	*11*
Parapet	*12*
Door/Window (Head)	*13*
Door/Window (Jamb)	*14*
Door/Window (Sill)	*15*
Wall Penetration (3D)	*16*
Wall Penetration	*17*
Rigid Insulation	*18*

©2018 ASC Profiles. All rights reserved.

General Notes

The attached installation details are intended to be a design aid and do not depict all situations. Modifications are the responsibility of the designer/user and should take into account climate conditions such as wind and snow, governing code requirements, and the actual usage and maintenance of the structure.

Applications:

Prestige Series is designed to be used as a soffit panel, or as a wall panel installed in the vertical or horizontal orientation. It shall not be utilized for roof applications. Prestige Series can be used over solid substrates or over spaced supports. This installation guide depicts panels installed over solid substrate. Details for panels installed over spaced supports would be similar.

Flashings:

Where possible, flashings should be lapped away from prevailing winds. Certain flashings should be supported if it is likely that equipment
(ladder, etc.) will be used against them. Check with AEP Span any time you intend to specify a prefinished flashing in a gauge or finish different than with Prestige Series. It is good practice to specify that all flashings be of the same material (gauge, color, finish) as the roof panels to ensure long-term durability. Field-painted flashings rarely equal the durability and colorfastness of factory baked-on paint systems. The enclosed details have minimized the use of exposed fasteners where possible. The edges of flashings have also been shown hemmed to strengthen and to minimize the exposure of cut edges.

Flashing design and fabrication is generally the responsibility of the contractor. For convenience, we have provided some typical flashing drawings on our website at
www.aepspan.com/files/Arch_Trims_Flashings.pdf

Applicable Prestige Series flashing part numbers are referenced within this installation guide. Note that flashing shapes and dimensions may vary greatly based on project requirements. Installation details and flashings referenced within are for general design guidance only.

Condensation, Insulation, & Ventilation:

It is the designer's responsibility to determine the need and composition of condensation control materials including insulation and vapor retarders, as well as ventilation requirements. Metal wall products are susceptible to condensation and its control should be carefully considered.

Thermal Movement:

Both panels and flashings must allow for thermal movement (expansion and contraction) of the materials, especially where long lengths are used. Appropriate gaps or other provisions must be provided to accommodate thermal movement.

Oil Canning:

Flat metal surfaces often display waviness commonly referred to as 'oil canning'. This can be caused by variations in raw material, processing variations, product handling, or variations in the installation substrate. Oil canning is a characteristic, not a defect, of panels manufactured from light-gauge metal. To reduce potential for oil canning, substrates should not deviate from a flat plane more than 1/4 inch in 20 feet, or 1/8 inch in 5 feet. Oil canning is not a cause for panel rejection. Additional technical information is available upon request.

References:

The Sheet Metal and Air Conditioning Contractors' National Association Inc. (SMACNA) manual is an excellent reference for sheet metal contractors. It's guidelines for underlayments, gutter and downspout size requirements, and expansion/contraction of metals and flashing joints should be followed.

Technical Assistance:

Contact your AEP Span Sales Representative for additional information.

NO REVEAL

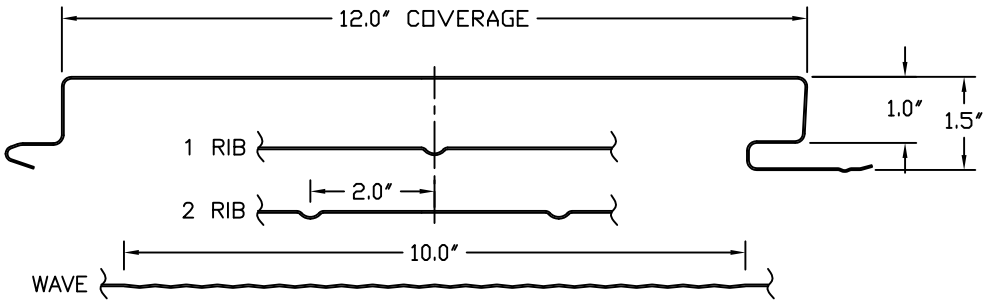

1" REVEAL

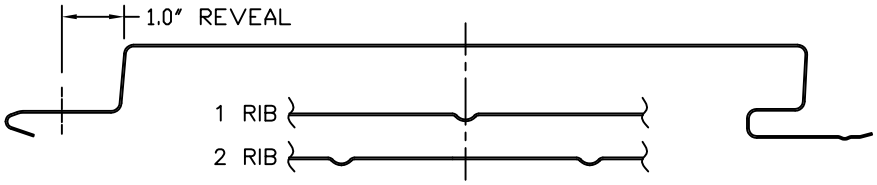

2" REVEAL

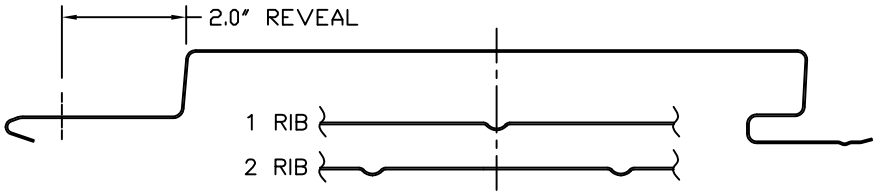

6" REVEAL

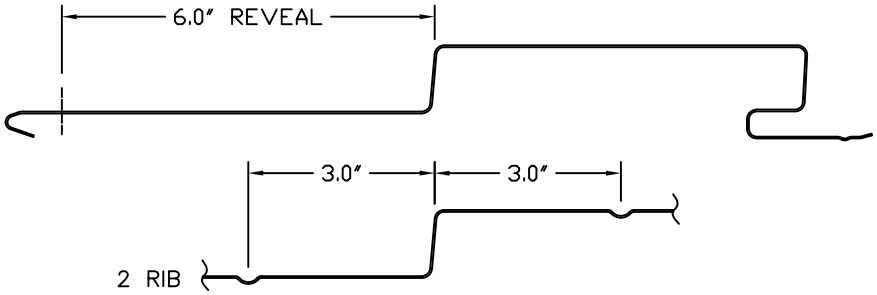

AEP SPAN®

PRESTIGE SERIES

HORIZONTAL INSTALL.

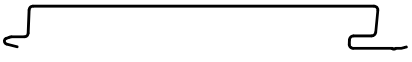

PANEL DETAILS

index

PSH-01

REV. 10/3/16

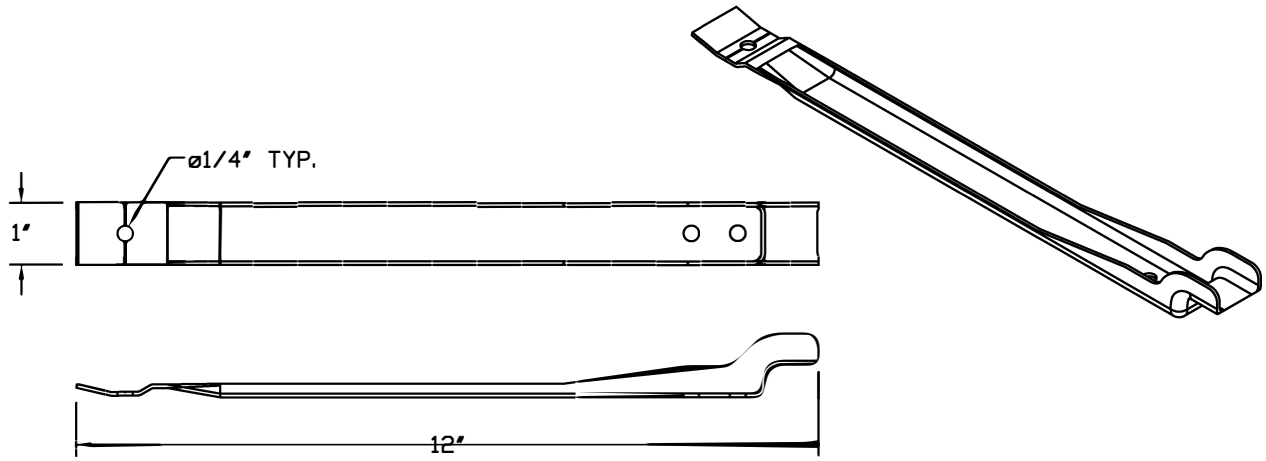

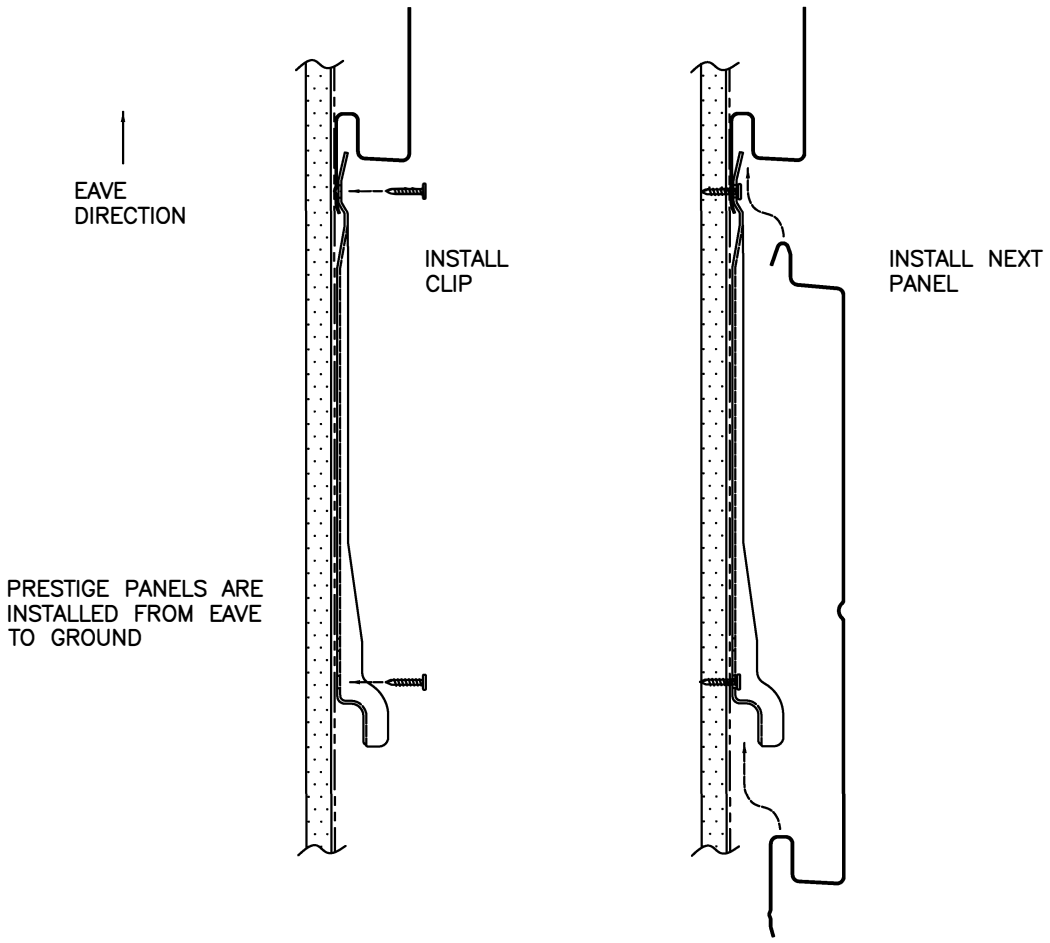

NOTES:
- CLIP REQUIRED FOR MOST WIND LOAD CONDITIONS.
- REFER TO PANEL ATTACHMENT SCHEDULES FOR PROPER CLIP/FASTENER SPACING & ASSOCIATED WIND LOAD CAPACITIES.
- REFER TO AEP SPAN TECHNICAL BULLETIN #35 FOR ADDITIONAL INFORMATION REGARDING CLIP USAGE.

AEP SPAN®

PRESTIGE SERIES

HORIZONTAL INSTALL.

CLIP

index

PSH-02

REV. 11/30/18

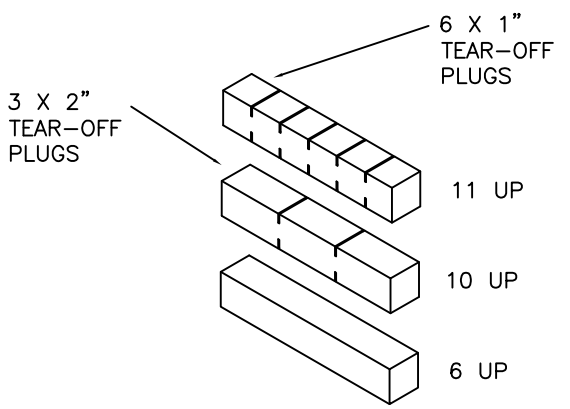

TOP SIDE CLOSURES

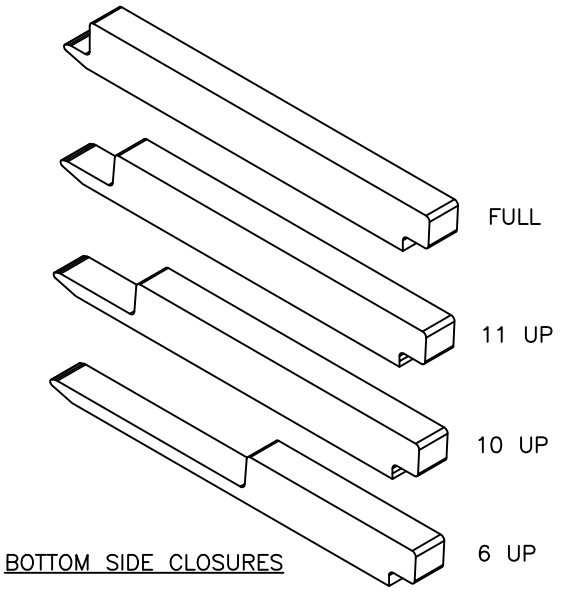

BOTTOM SIDE CLOSURES

TOP SIDE CLOSURE
INSTALLATION

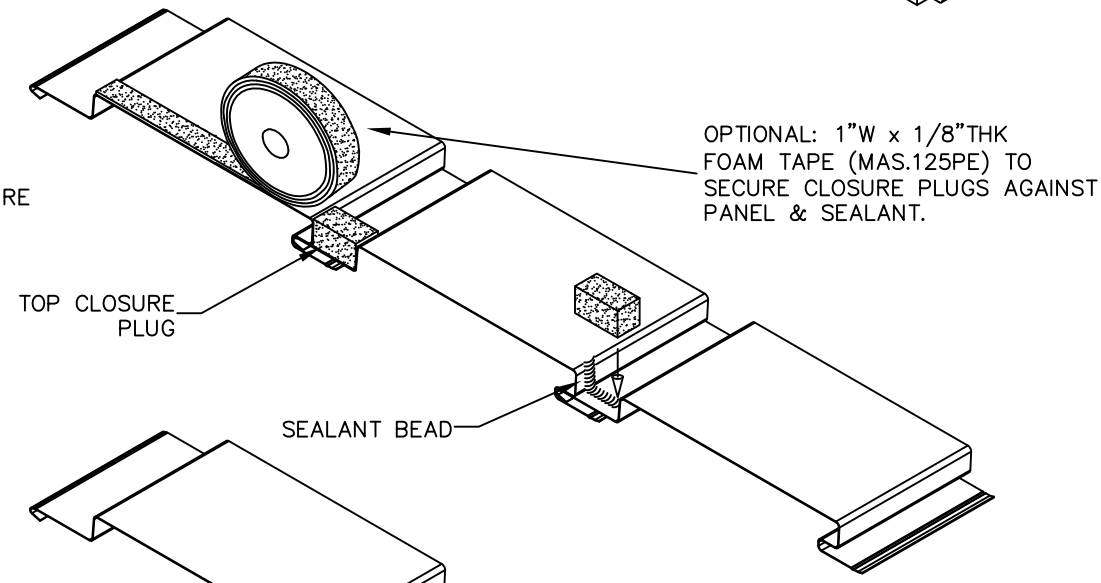

BOTTOM SIDE CLOSURE
INSTALLATION

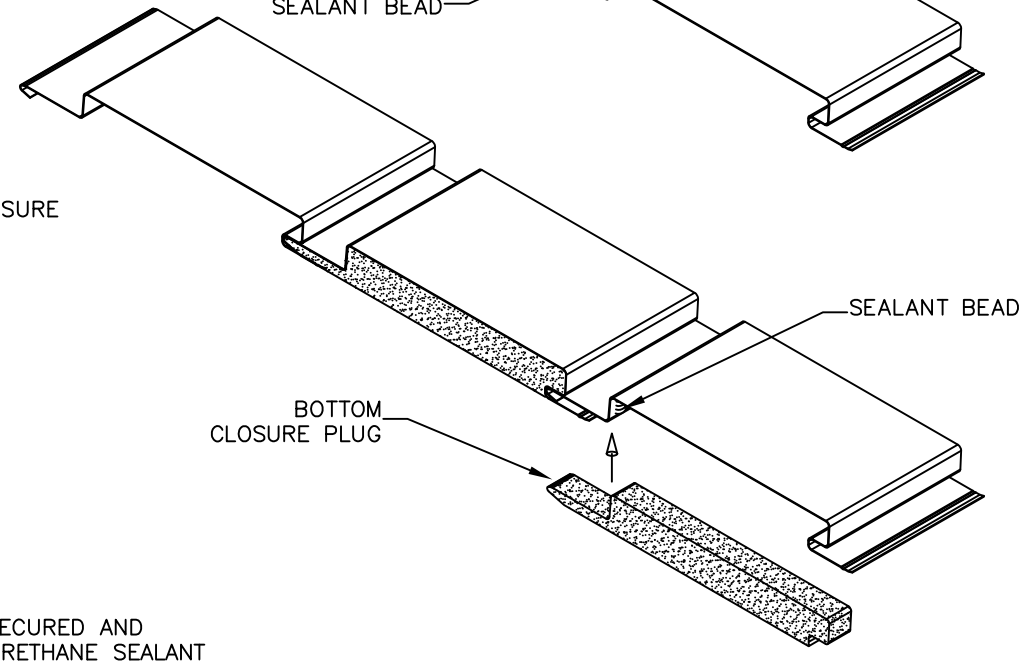

NOTES:
– ALL CLOSURES SECURED AND
SEALED WITH POLYURETHANE SEALANT

AEP SPAN®

PRESTIGE SERIES
HORIZONTAL INSTALL.

CLOSURES

index

PSH-03

REV. 6/20/17

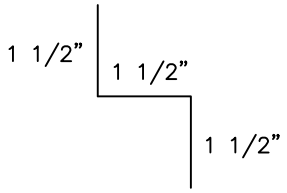

ZC224

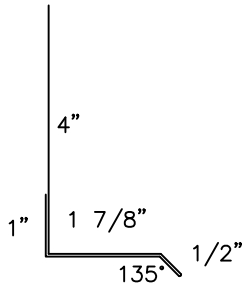

DF024

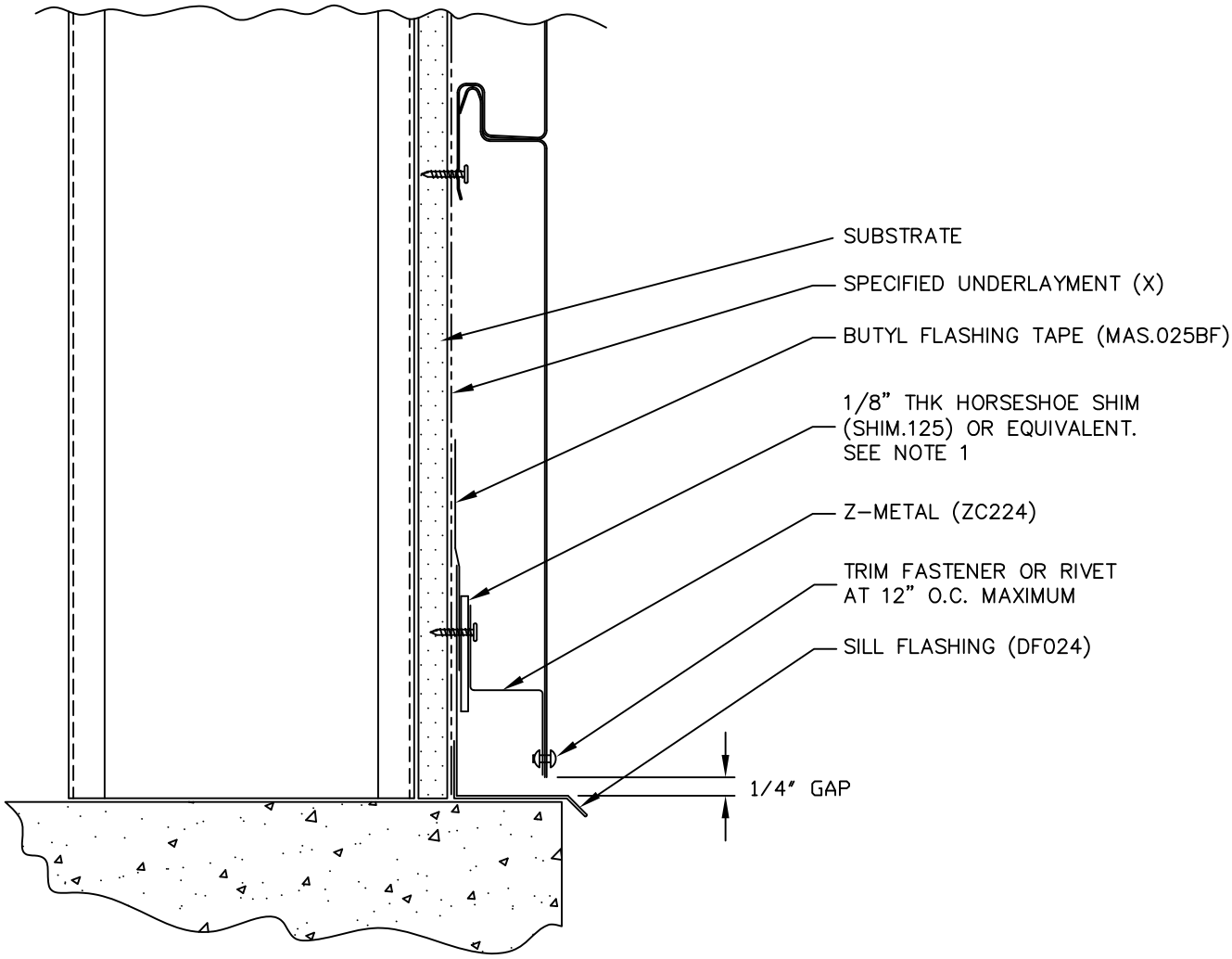

1. SHIM USED FOR MOISTURE CONTROL (DRAINAGE) IN FLUSH MOUNT APPLICATIONS.
(X) – NOT BY AEP SPAN

PRESTIGE SERIES PANELS ARE INSTALLED FROM EAVE TO GROUND.

AEP SPAN®

PRESTIGE SERIES

HORIZONTAL INSTALL.

BASE

PSH-04

REV. 6/20/17

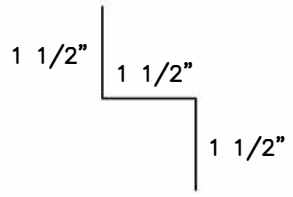

ZC224

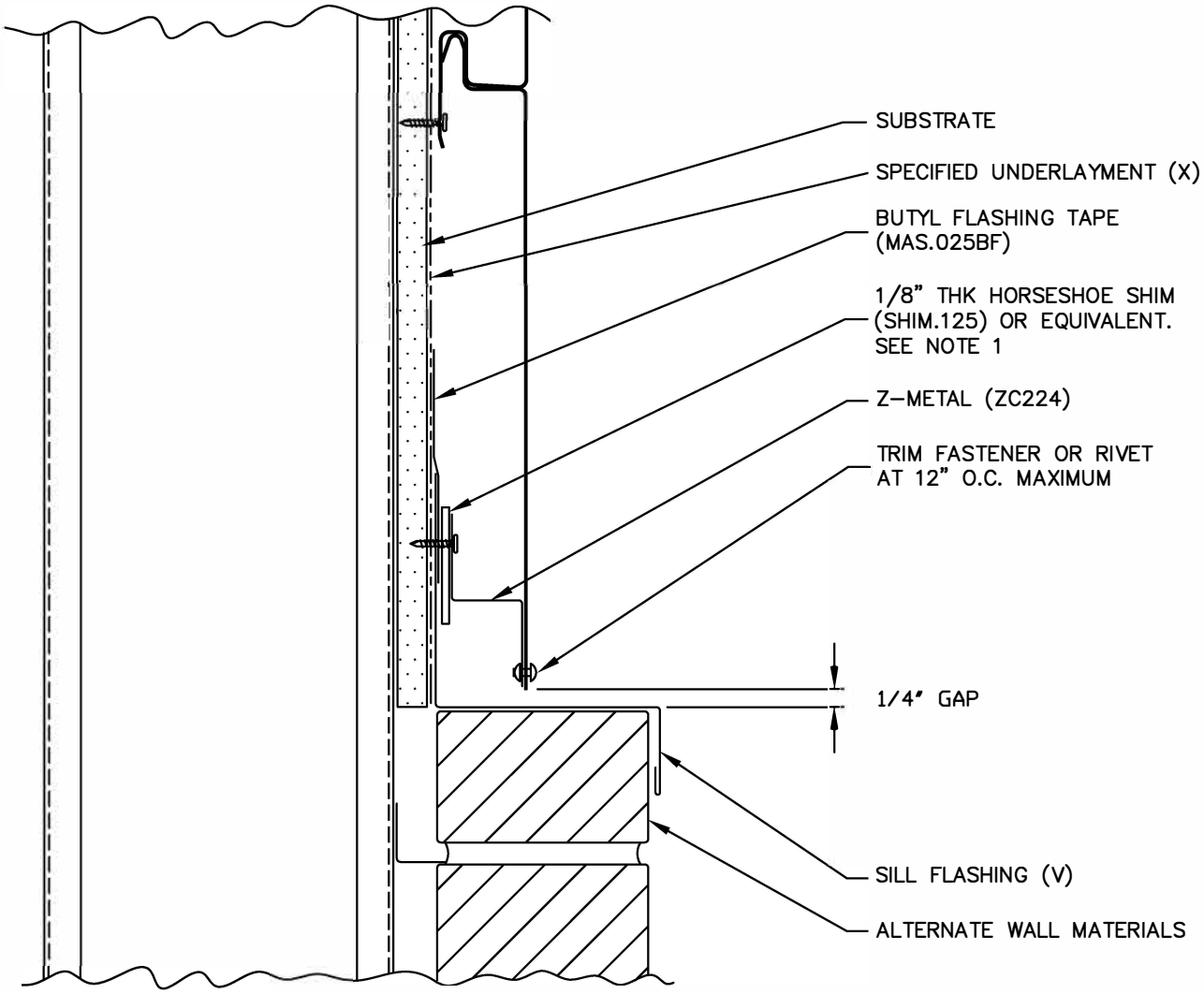

1. SHIM USED FOR MOISTURE CONTROL (DRAINAGE) IN FLUSH MOUNT APPLICATIONS.
(X) – NOT BY AEP SPAN
(V) – DIMENSIONS VARY BASED ON PROJECT CONDITIONS

AEP SPAN®

PRESTIGE SERIES
HORIZONTAL INSTALL.

SILL

index

PSH-05

REV. 6/20/17

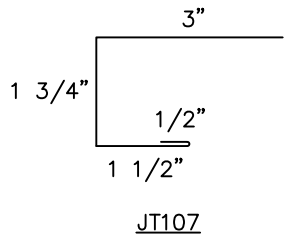

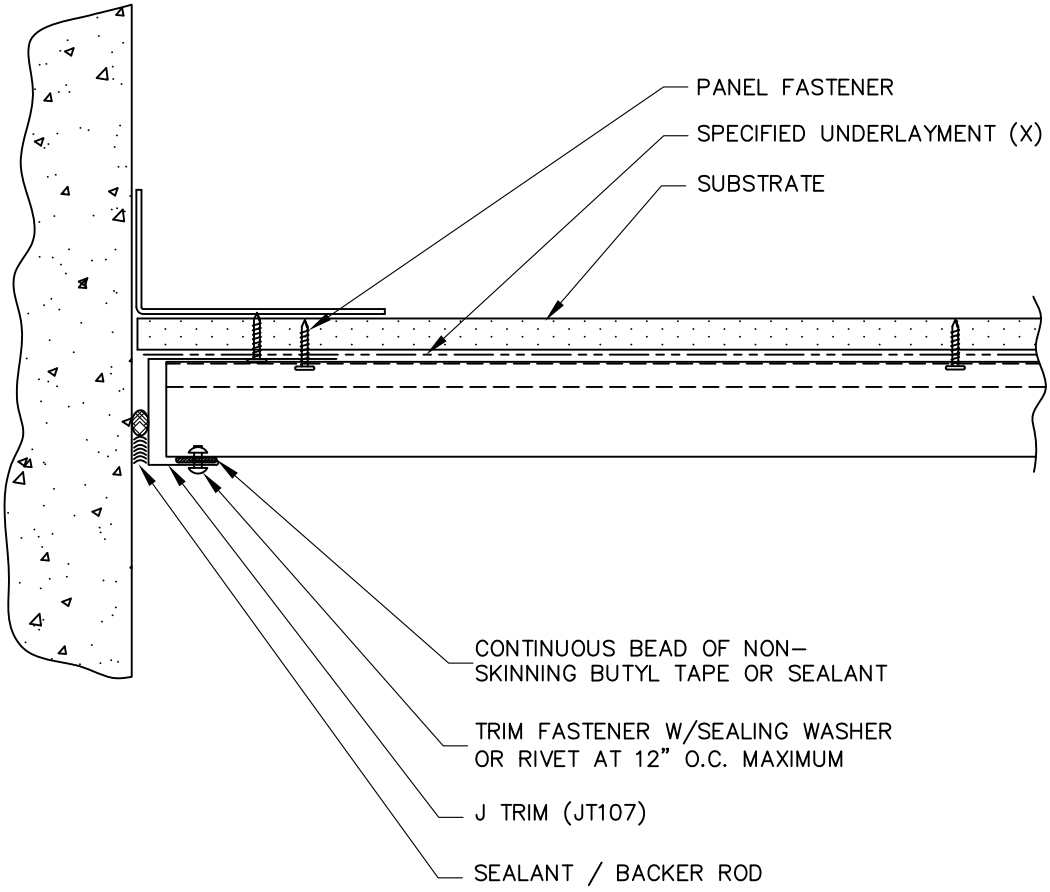

(X) – NOT BY AEP SPAN

AEP SPAN®

PRESTIGE SERIES

HORIZONTAL INSTALL.

END WALL

index

PSH-06

REV. 10/3/16

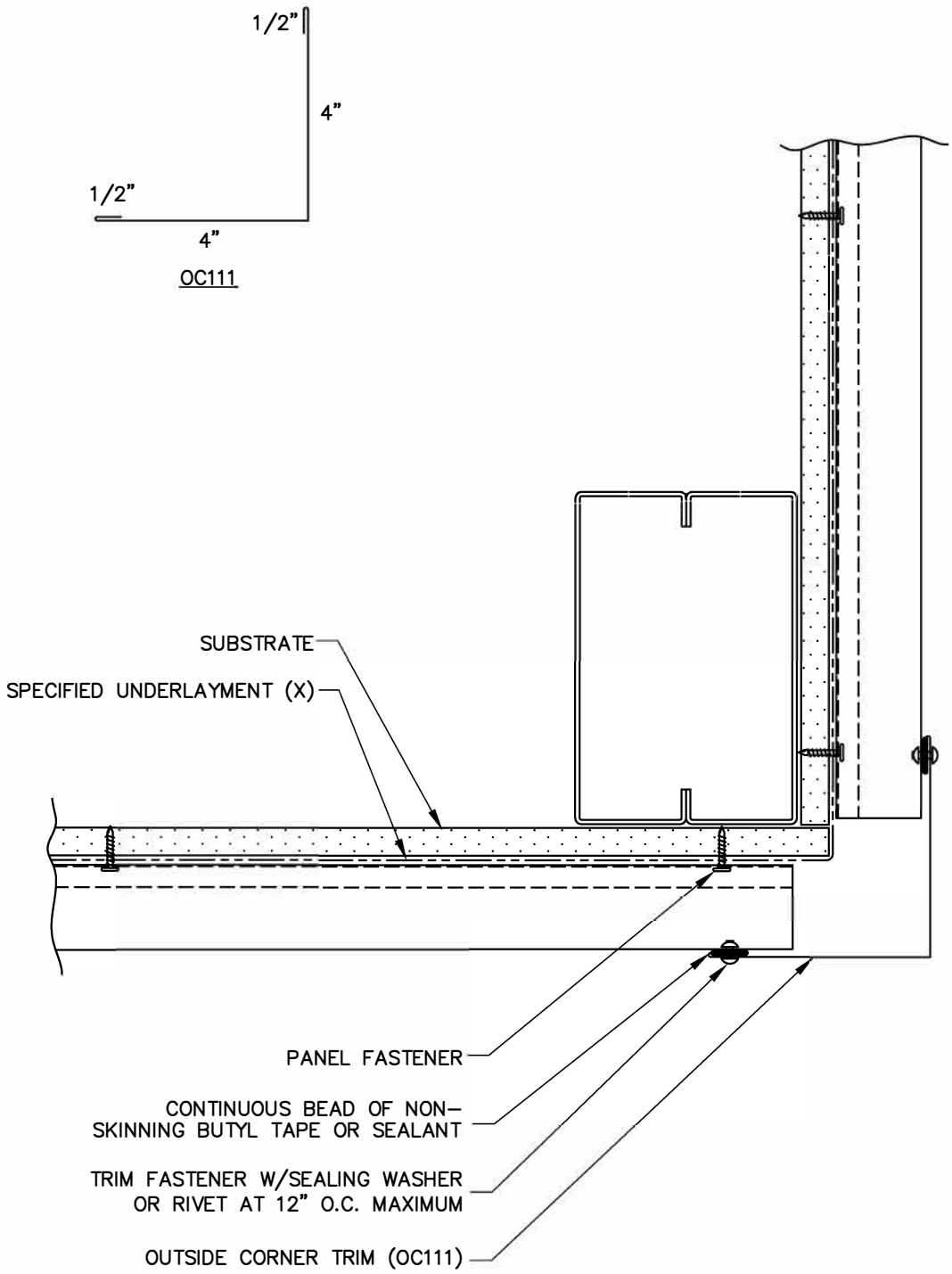

(X) – NOT BY AEP SPAN

AEP SPAN®

PRESTIGE SERIES

HORIZONTAL INSTALL.

OUTSIDE CORNER

index

PSH-07

REV. 10/3/16

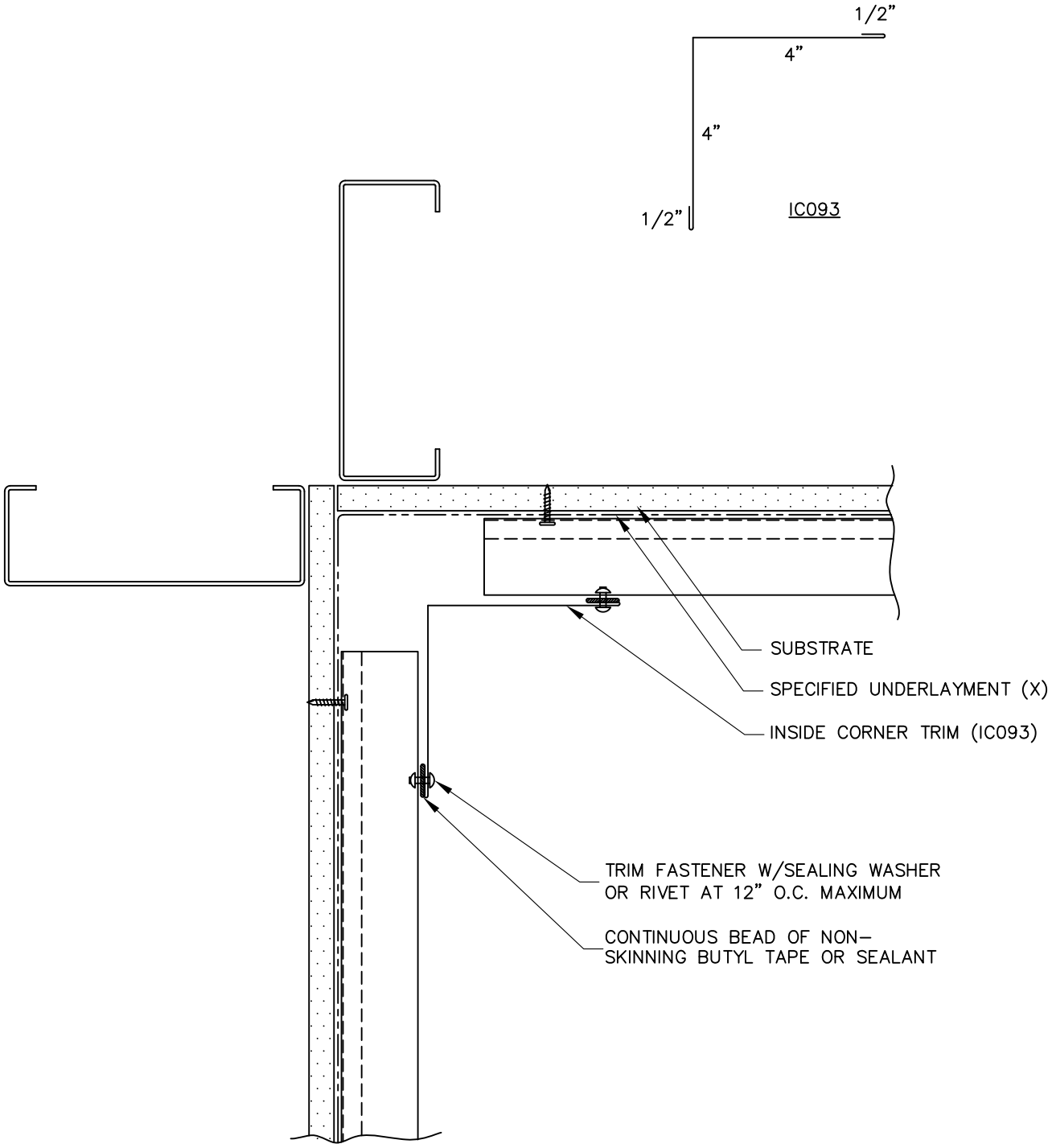

(X) – NOT BY AEP SPAN

AEP SPAN®

PRESTIGE SERIES

HORIZONTAL INSTALL.

INSIDE CORNER

index

PSH-08

REV. 10/3/16

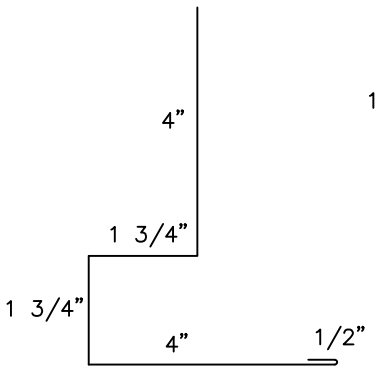

DF016

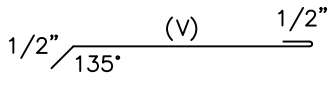

COVER TRIM

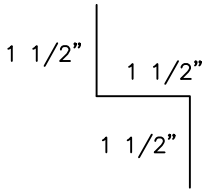

ZC224

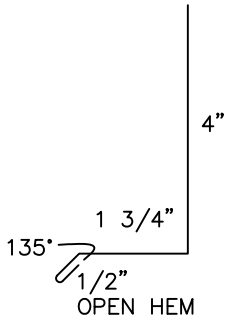

DF030

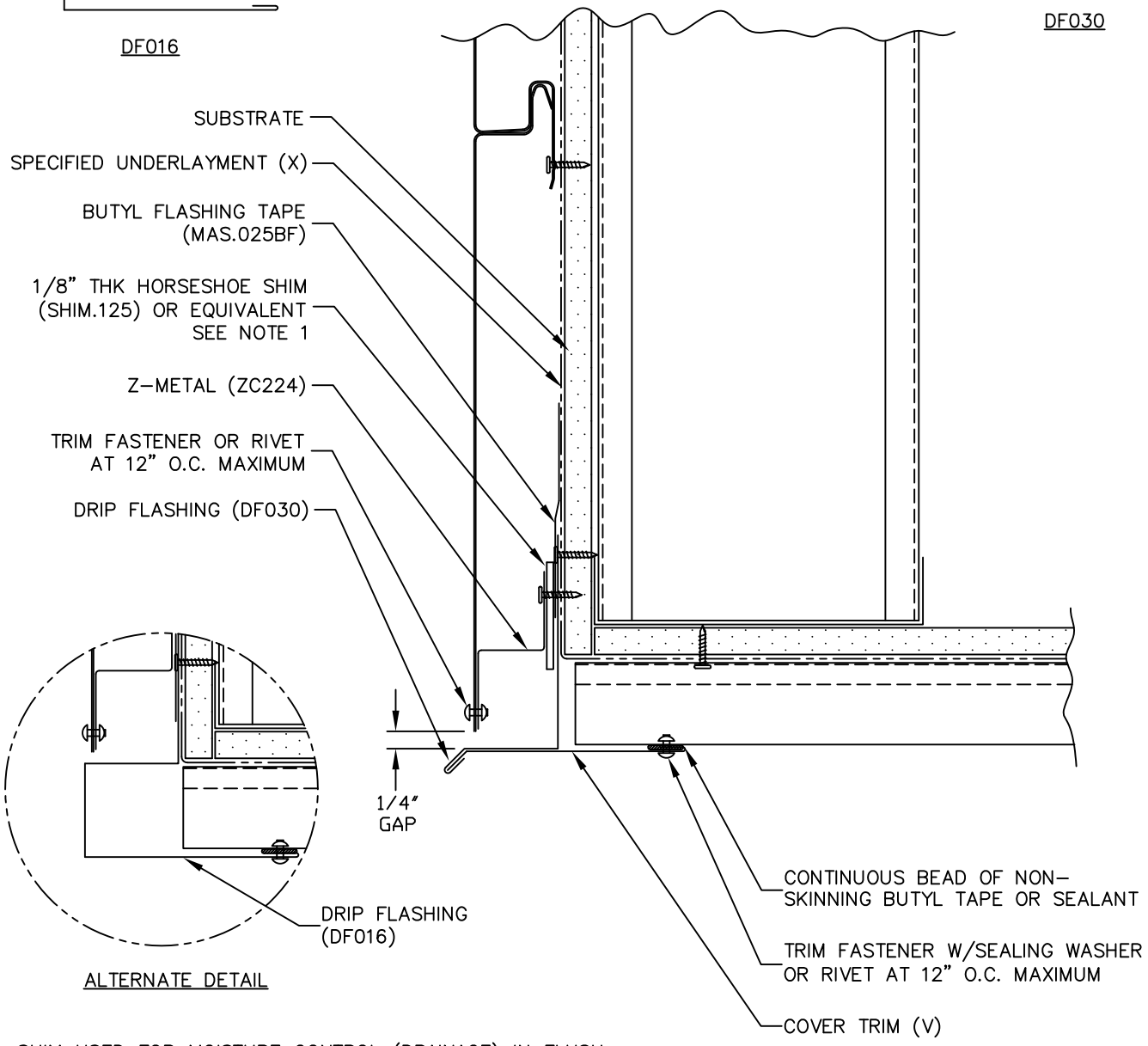

ALTERNATE DETAIL

1. SHIM USED FOR MOISTURE CONTROL (DRAINAGE) IN FLUSH MOUNT APPLICATIONS.
(X) – NOT BY AEP SPAN
(V) – DIMENSIONS VARY BASED ON PROJECT CONDITIONS

AEP SPAN®

PRESTIGE SERIES

HORIZONTAL INSTALL.

SOFFIT (FRONT)

PSH-09

REV. 6/20/17

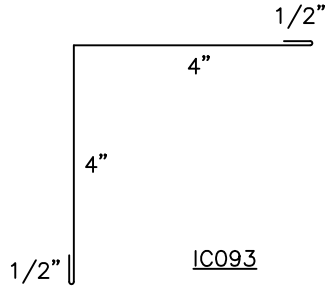

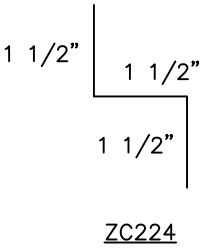

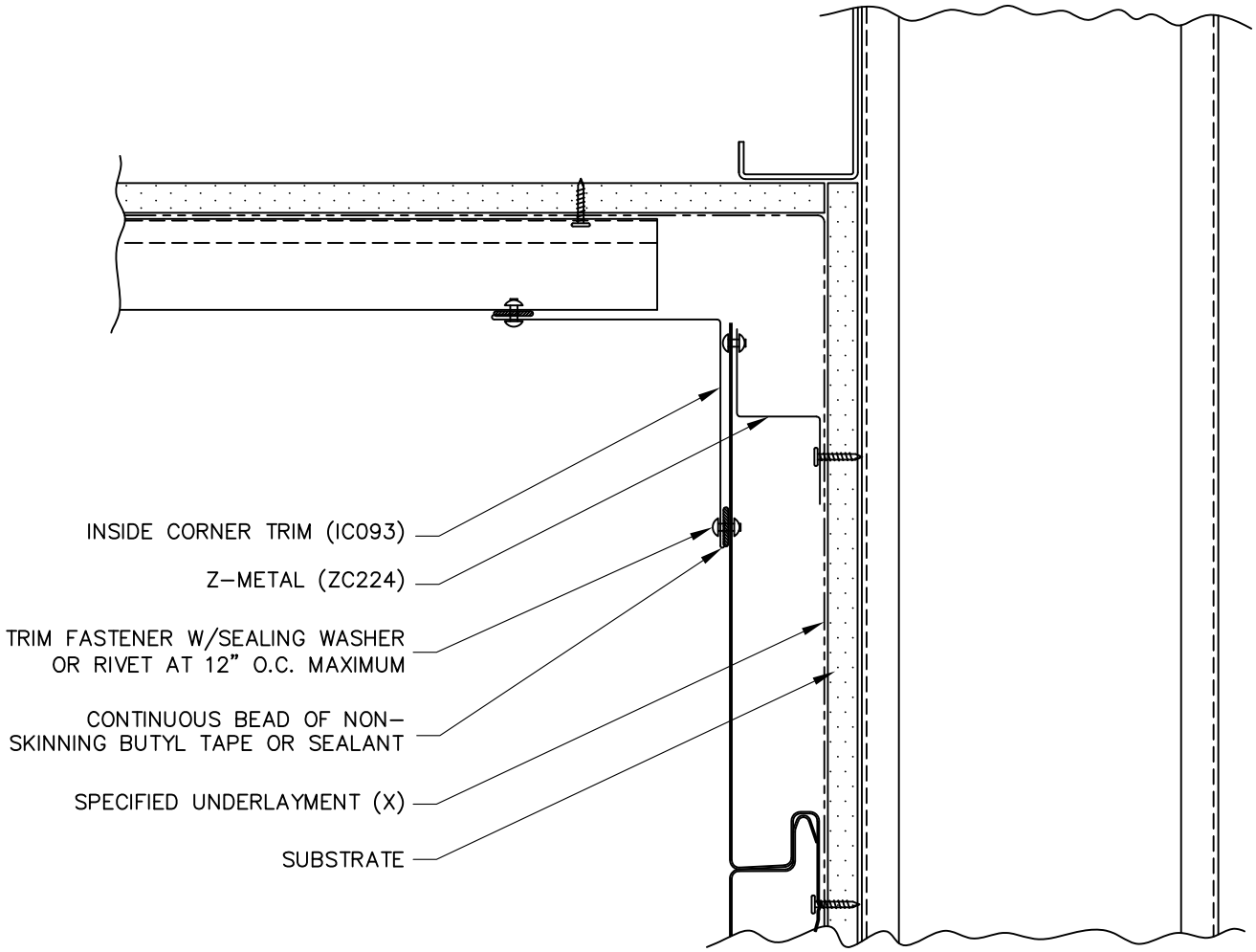

(X) – NOT BY AEP SPAN

AEP SPAN®

PRESTIGE SERIES

HORIZONTAL INSTALL.

SOFFIT (BACK)

index

PSH-10

REV. 10/3/16

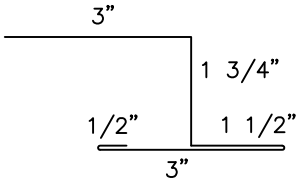

MT109

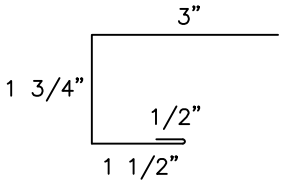

JT107

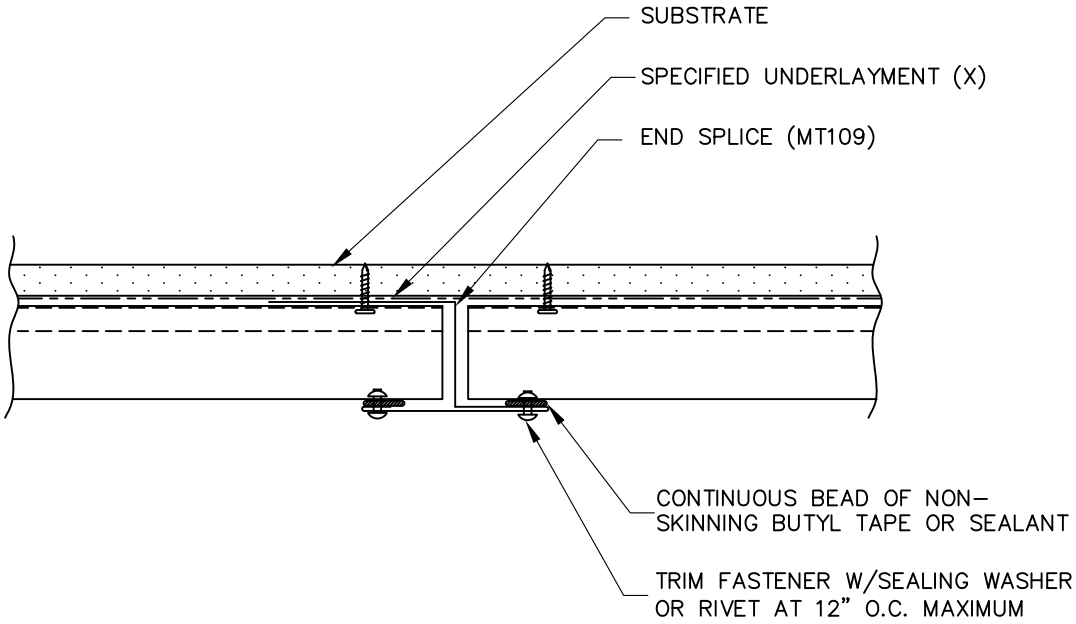

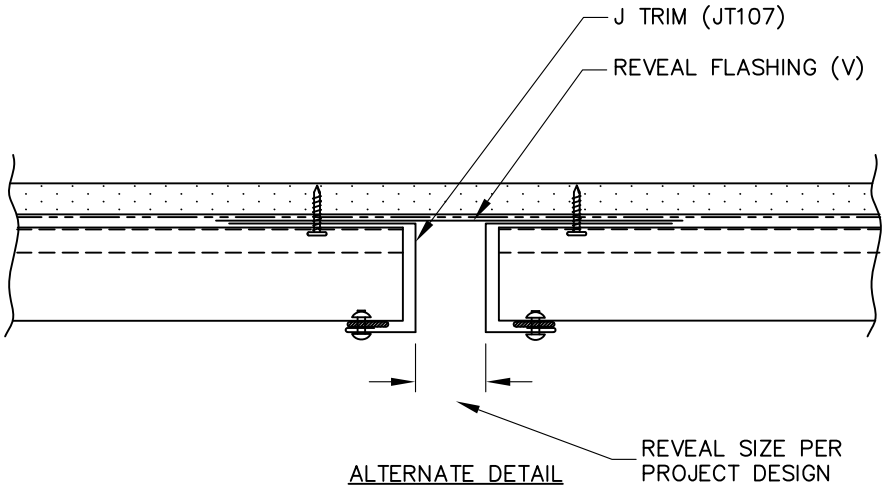

ALTERNATE DETAIL

(X) – NOT BY AEP SPAN
(V) – DIMENSIONS VARY BASED ON PROJECT CONDITIONS

AEP SPAN®

PRESTIGE SERIES
HORIZONTAL INSTALL.

END SPLICE

PSH-11

REV. 10/3/16

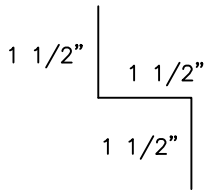

ZC224

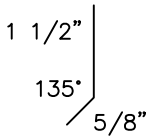

TC209

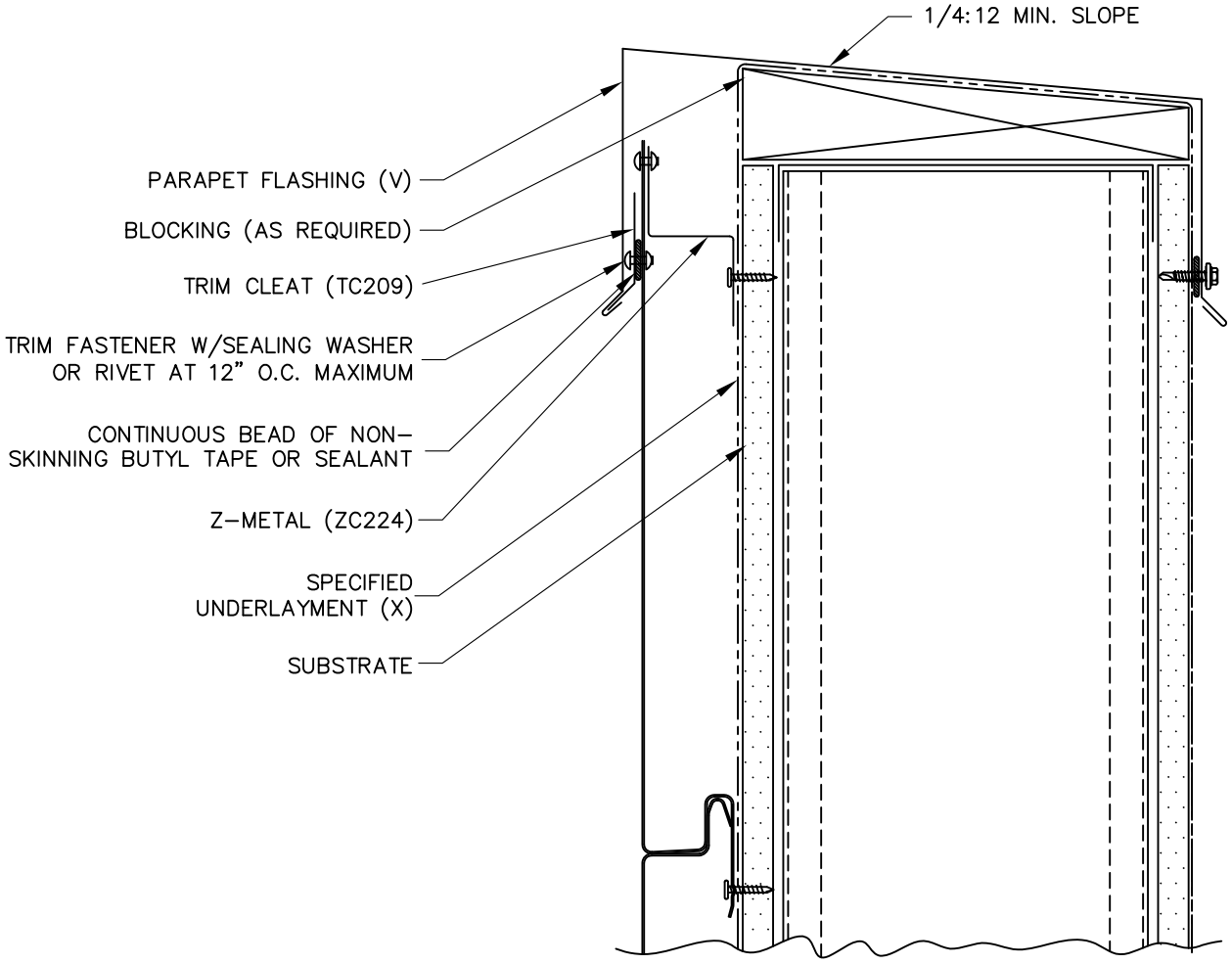

(X) – NOT BY AEP SPAN
(V) – DIMENSIONS VARY BASED ON PROJECT CONDITIONS

AEP SPAN®

PRESTIGE SERIES
HORIZONTAL INSTALL.

PARAPET

PSH-12

REV. 11/16/18

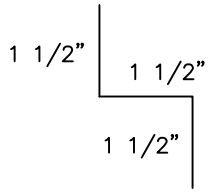

ZC224

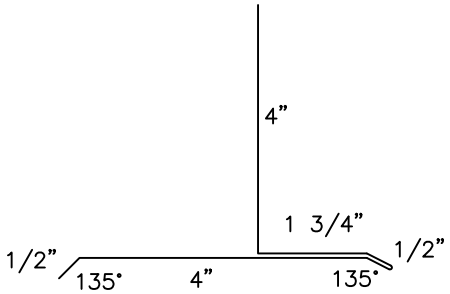

HT091

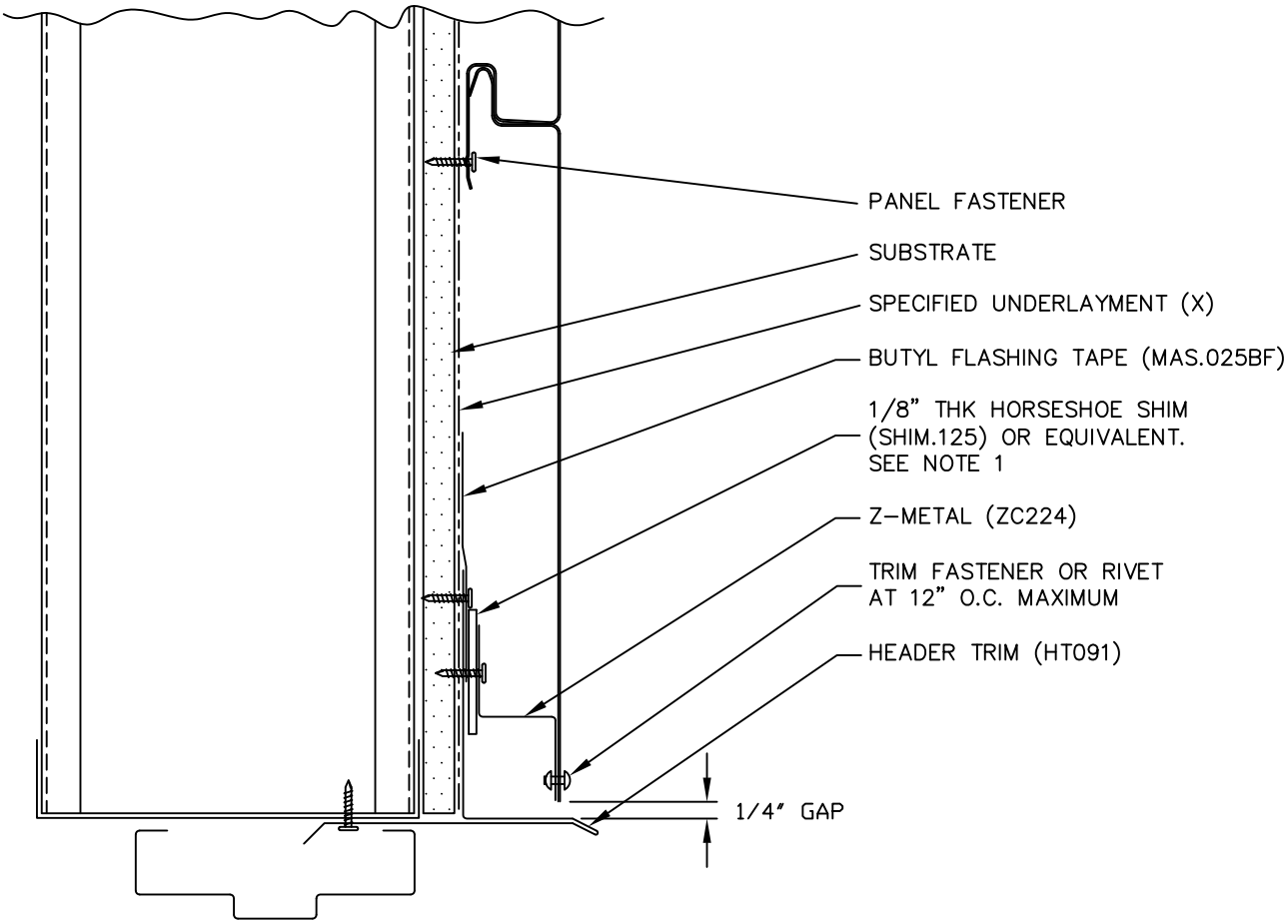

1. SHIM USED FOR MOISTURE CONTROL (DRAINAGE) IN FLUSH MOUNT APPLICATIONS.
(X) – NOT BY AEP SPAN

AEP SPAN®

PRESTIGE SERIES

HORIZONTAL INSTALL.

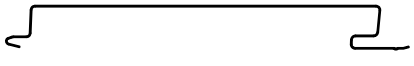

DOOR / WINDOW (HEAD)

index

PSH-13

REV. 6/20/17

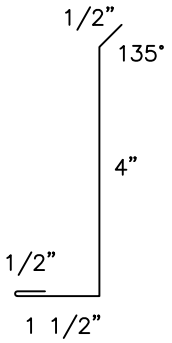

WC217

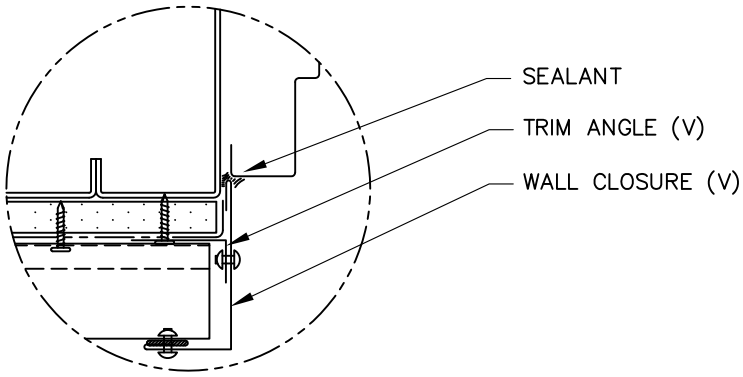

ALTERNATE DETAIL

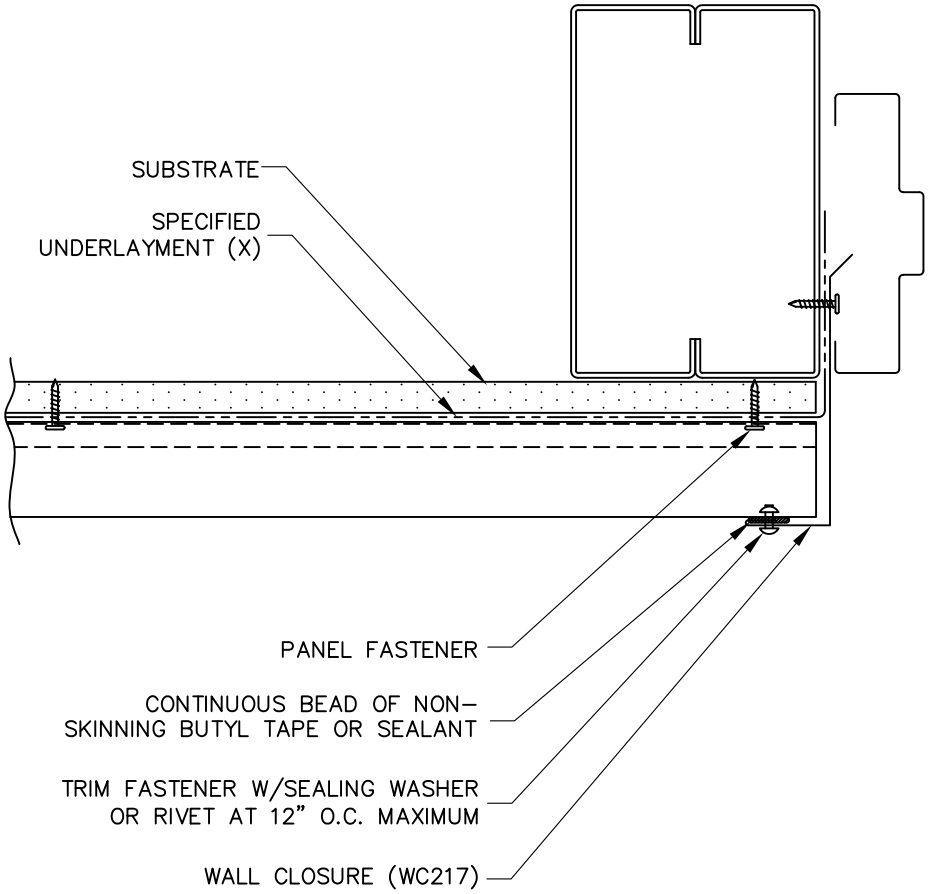

(X) – NOT BY AEP SPAN

AEP SPAN®

PRESTIGE SERIES

HORIZONTAL INSTALL.

DOOR / WINDOW (JAMB)

index

PSH-14

REV. 10/3/16

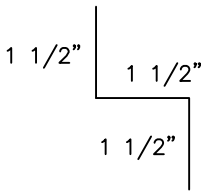

ZC224

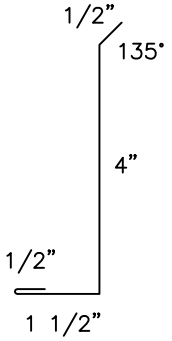

WC217

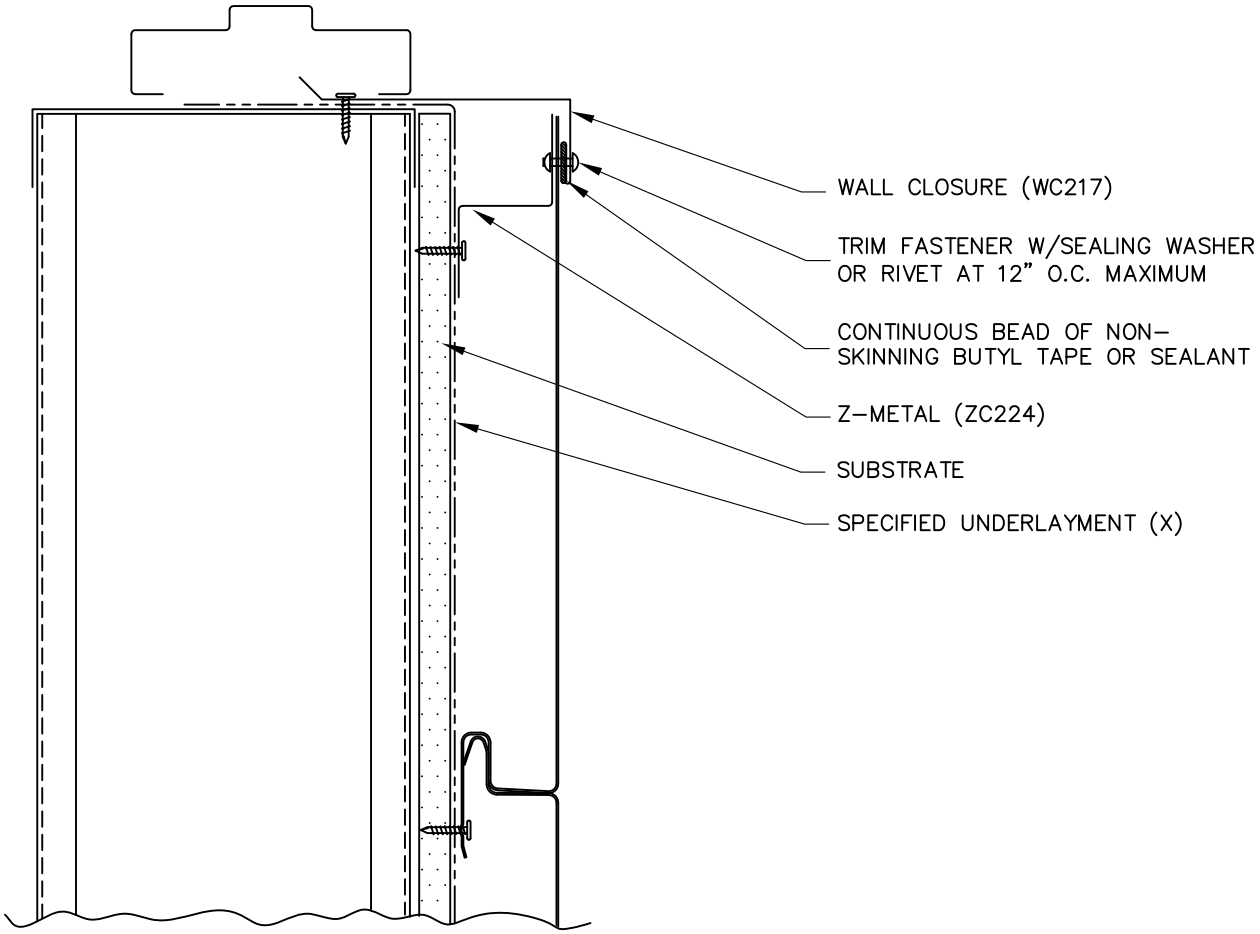

(X) – NOT BY AEP SPAN

AEP SPAN®

PRESTIGE SERIES

HORIZONTAL INSTALL.

DOOR / WINDOW (SILL)

index

PSH-15

REV. 10/3/16

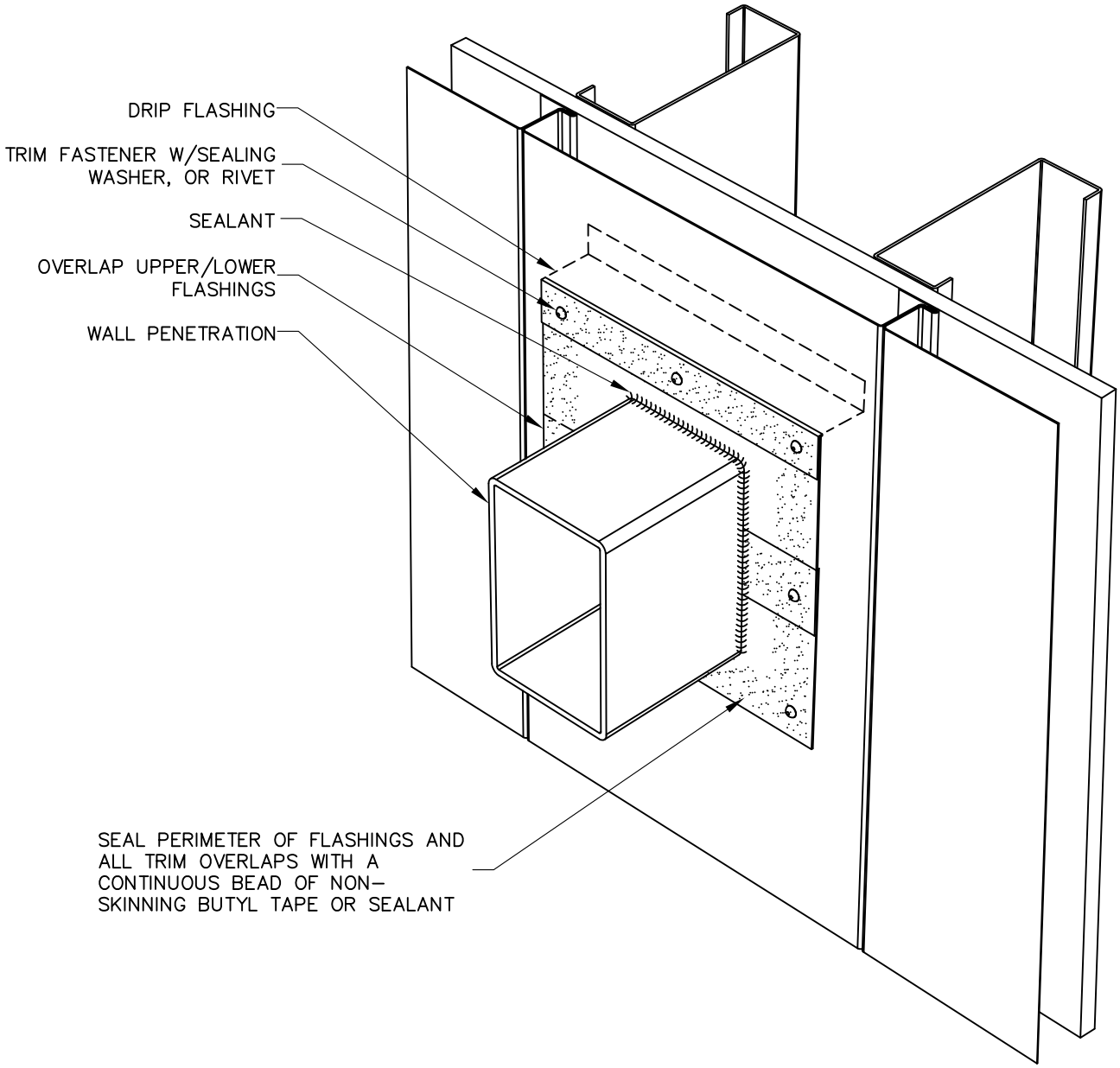

NOTE: VERTICAL INSTALLATION SHOWN;
HORIZONTAL INSTALLATION SIMILAR

AEP SPAN®

PRESTIGE SERIES

HORIZONTAL INSTALL.

WALL PENETRATION (3D)

index

PSH-16

REV. 10/3/16

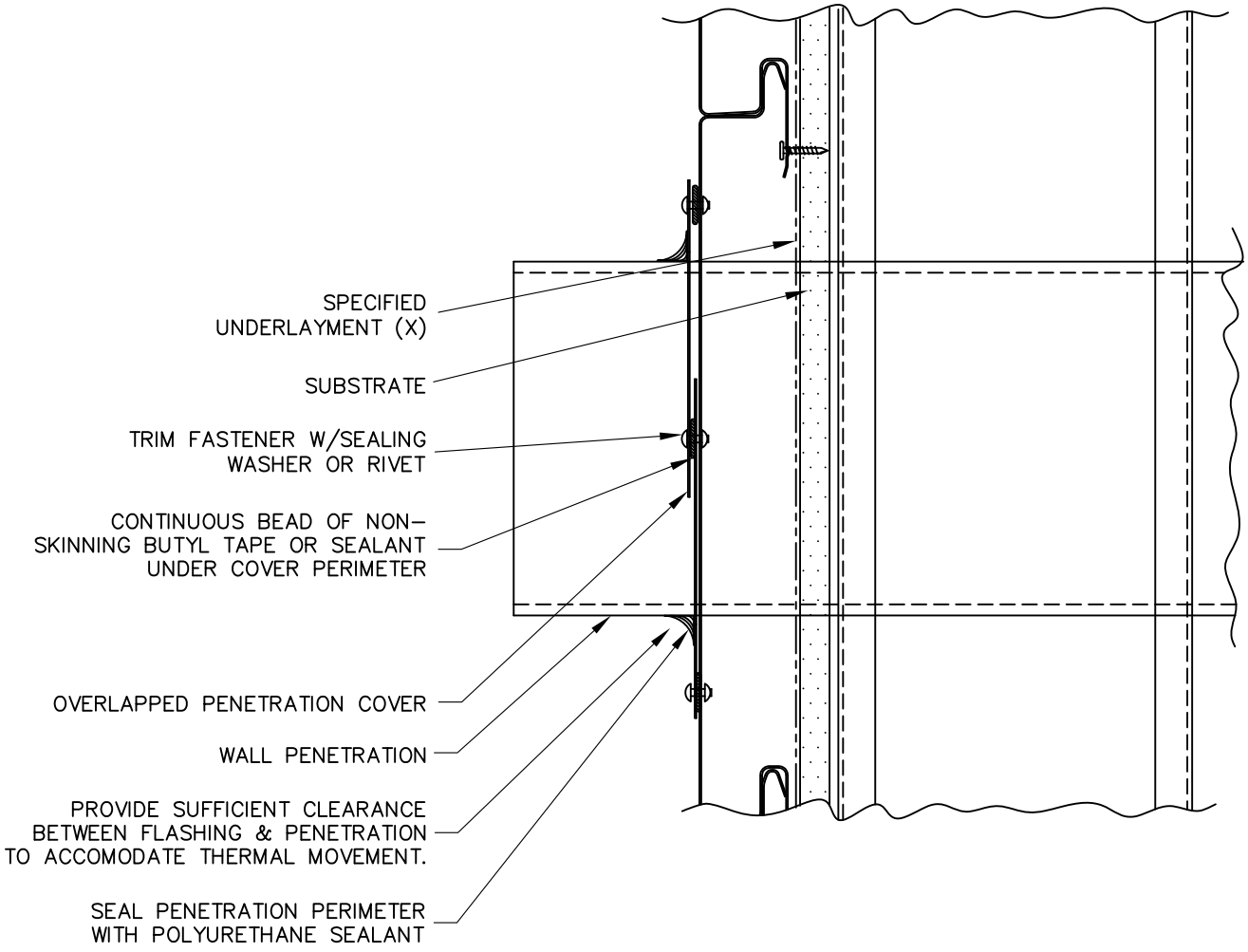

(X) – NOT BY AEP SPAN

AEP SPAN®

PRESTIGE SERIES

HORIZONTAL INSTALL.

WALL PENETRATION

index

PSH-17

REV. 10/3/16

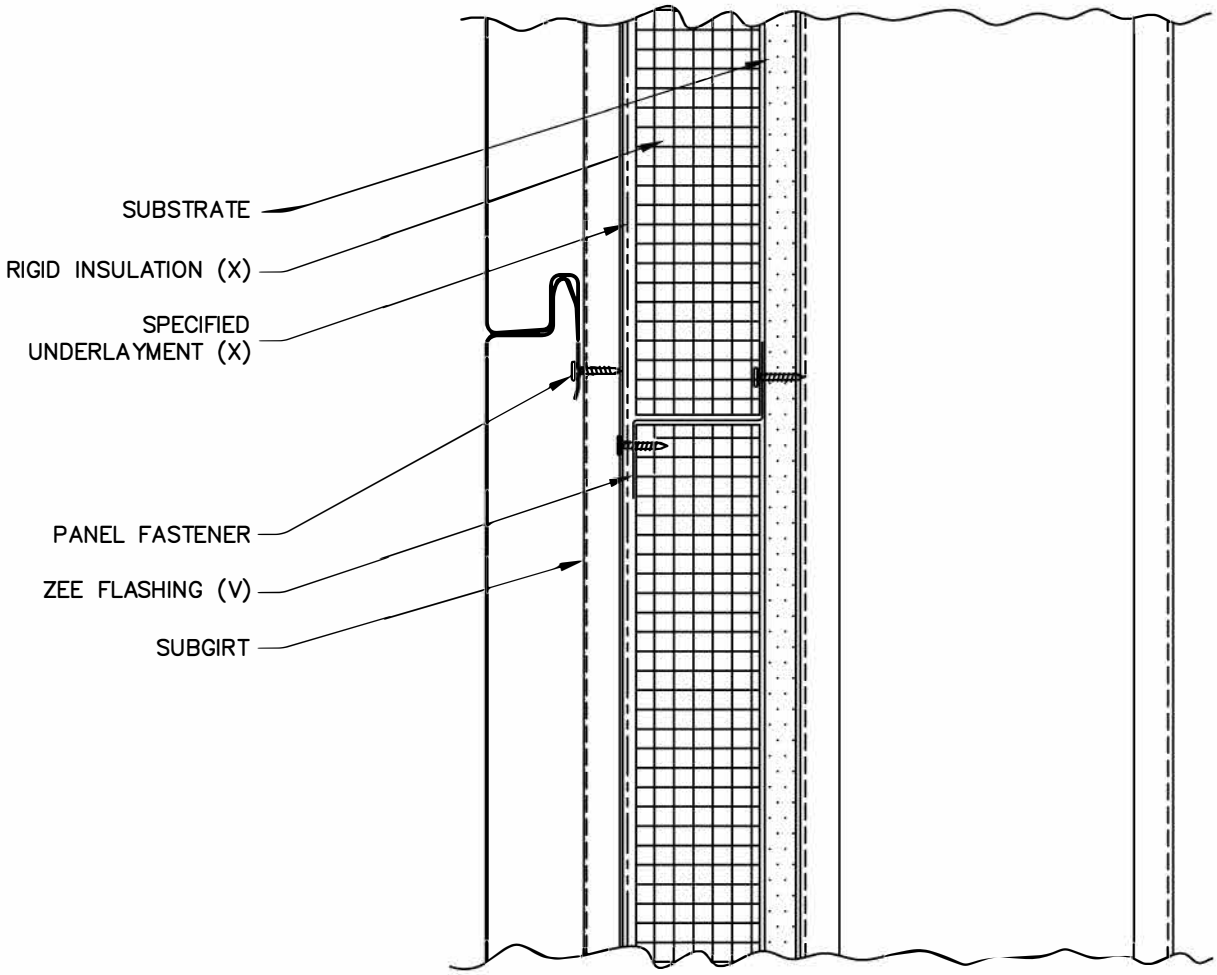

(X) – NOT BY AEP SPAN
(V) – DIMENSIONS AND GAGE VARY BASED ON PROJECT CONDITIONS

AEP SPAN®

PRESTIGE SERIES
HORIZONTAL INSTALL.

RIGID INSULATION

index

PSH-18

REV. 10/3/16

MANUFACTURING FACILITY:

Tacoma, Washington
2141 Milwaukee Way
Tacoma, WA 98421

CORPORATE HEADQUARTERS:

ASC Profiles LLC
2110 Enterprise Boulevard
West Sacramento, CA 95691

CUSTOMER SERVICE:
800-733-4955

Visit us at:
www.aepspan.com

©2018 ASC Profiles LLC. All rights reserved.