SpanSeam™

w/ Low Profile Clip

Installation Guide

SpanSeam
w/ Low Profile Clip
Installation Guide

- Table of Contents -

Section	***Page***
General Notes	*i*
Panel Information	*1*
Clip Information	*2*
Eave, Floating	*3*
Eave, Fixed	*4*
Eave w/ Gutter	*5*
Eave Hem	*6*
Rib Cover	*7*
Rake	*8*
Rake Wall	*9*
Ridge/Hip, Fixed	*10*
Ridge/Hip, Floating	*11*
Vented Ridge	*12*
Head Wall, Fixed	*13*
Head Wall, Floating	*14*
High Eave, Fixed	*15*
High Eave, Floating	*16*
Slope Transition, HI-LO	*17*
Slope Transition, LO-HI	*18*
Valley, Floating	*19*
Valley, Fixed	*20*
Panel Lap, Floating	*21*
Panel Lap, Floating 3D	*22*
Panel Lap, Fixed	*23*
Panel Lap, Fixed 3D	*24*
Panel Package Handling	*25*
Panel Installation Layout	*26*

©2026 ASC Profiles LLC. All rights reserved. Sep26

Panel Seaming *27*
Rib Cover, 3D *28*
Roof Penetrations *29*
Roof Curb (Rake Flashings) *30*
Roof Curb (Uphill/Downhill) *31*

General Notes

The attached installation details are intended to be a design aid and do not depict all situations. Modifications are the responsibility of the designer/user and should take into account climate conditions such as wind and snow, governing code requirements, and the actual usage and maintenance of the structure.

Flashings:

Where possible, flashings should be lapped away from prevailing winds. Certain flashings should be supported if it is likely that equipment (ladder, etc.) will be used against them or if foot traffic is anticipated. Check with AEP Span any time you intend to specify a prefinished flashing in a gauge or finish different than the roof panels. It is good practice to specify that all flashings be of the same material (gauge, color, finish) as the roof panels to ensure long-term durability. Field-painted flashings rarely equal the durability and color fastness of factory baked-on paint systems. The enclosed details have minimized the use of exposed fasteners where possible. The edges of flashings have also been shown hemmed to strengthen and to minimize the exposure of cut edges.

Flashing design and fabrication is generally the responsibility of the contractor. For convenience, we have provided some flashing drawings on our website. Applicable SpanSeam flashing part numbers are referenced within this installation guide.

Substrates:

SpanSeam roofing panels can be used over solid substrates or over spaced supports.

Slope Requirements:

Panels should be used on slopes of ¼":12 or greater.

Panel Attachment:

Consult the SpanSeam fastener attachment schedule or contact your AEP Span representative for proper clip spacing and fastener size, type, and quantities to meet the project's wind uplift (negative) load requirements. The details in this guide show two fasteners per clip. A minimum of two fasteners is always recommended although three fasteners may be required based on panel load requirements.

Condensation, Insulation, & Ventilation:

It is the designer's responsibility to determine the need and composition of condensation control materials including insulation and vapor retarders, as well as ventilation requirements. Metal roofing is susceptible to condensation and its control should be carefully considered. Applications over rigid insulation may require solid blocking/framing for installation of perimeter flashings and drag load fasteners.

Underlayments:

Prior to installation of metal roofing panels, it is recommended that an underlayment be installed over the roof substrate. AEP Span encourages the use of *AEP Span Underlayment HT* as it is designed specifically for use under all AEP roofing systems and is suitable for use under any metal roofing system or coping. *AEP Span Underlayment HT* is ***required*** by AEP Span for AEP Span Full System Weathertightness Warranties. *AEP Span Underlayment HT* is a high temperature, self-healing, self-adhering, peel and stick underlayment with a non-abrasive surface that will not mar, scratch, or abrade the underside of metal panels and flashings. Please note that additional protection may be required to

meet Class A fire ratings as defined in UL790 classified assemblies.

"Pinning" Requirements:
The panels must only be "pinned" at one location only to resist the "drag" loads caused by the panel weight, live loads, and snow loads. The intensity of the drag load is a function of the slope, the loads involved, and the length of the panels. Panels must not be pinned at more than one location otherwise damages induced by thermal movement will occur.

Thermal Movement:

Both panels and flashings must allow for thermal movement (expansion and contraction) of the materials, especially where long lengths are used. Appropriate gaps or provisions must be provided to accommodate thermal movement.

Snow Design:

SpanSeam panels are suitable for light snow loads only. If possible, valleys, gutters, roof elevation changes and penetrations should be minimized or eliminated in snow areas. Roof penetrations should be located as close to the ridge or peak of the roof as possible to minimize accumulations of ice and snow and the effects of thermal movement of the roof panels. Premium membrane underlayments like *AEP Span Underlayment HT* or equivalent should be used. Valleys in snow areas require special consideration due to the accumulation of snow and ice from tributary roof areas.

Valleys:

Valley dimensions must be the proper width to account for slope, snow, ice, and rain conditions. Valleys should receive a premium underlayment since they are susceptible to water buildup. Valleys must have positive slope for drainage and be kept free of debris so that water does not back up and intrude under the panels.

Oil Canning:

Flat metal surfaces often display waviness commonly referred to as 'oil canning'. This can be caused by variations in raw material, processing variations, product handling, or variations in the substrate and roofing underlayments. Oil canning is a characteristic, not a defect, of panels manufactured from light-gauge metal. Panels are factory "corrective leveled" to minimize oil canning. Oil canning is not a cause for panel rejection. Additional information is available upon request.

References:

The Sheet Metal and Air Conditioning Contractors' National Association Inc. (SMACNA) manual is an excellent reference for sheet metal contractors. It's guidelines for underlayments, gutter and downspout size requirements, and expansion/contraction of metals and flashing joints should be followed.

Technical Assistance:

Contact your AEP Span Sales Representative for additional information.

SPANSEAM (UNSEAMED):

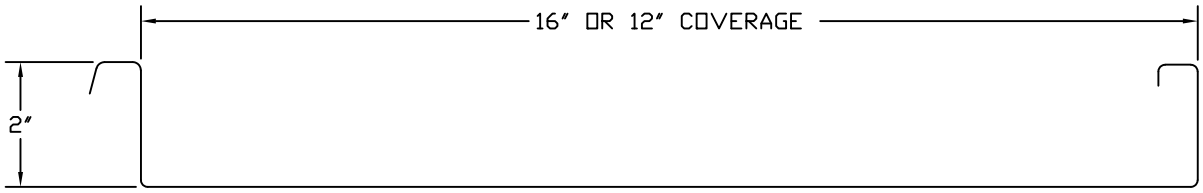

FLAT FINISH

STRIATED
16" PANEL ONLY

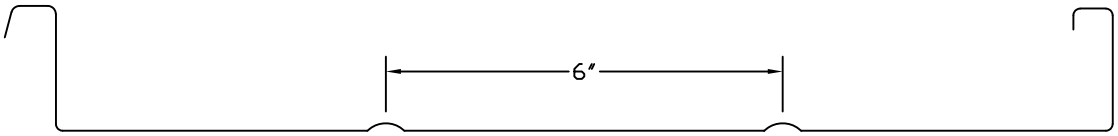

PENCIL RIBS
16" PANEL ONLY

SPANSEAM (SEAMED):

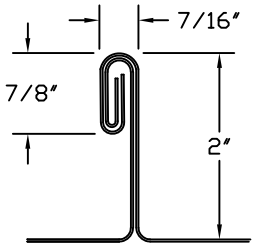

DIMENSIONS
APPROXIMATE

AEP SPAN

SPANSEAM
(W/ LOW CLIP)

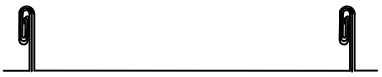

PANEL INFORMATION

SPS-LOW-01

REV. 1/8/21

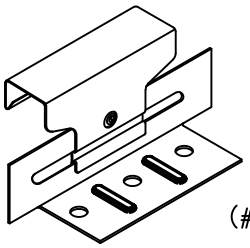

(#SL2CLP2LOW)

LOW PROFILE CLIP

- HOLDS PANEL CLOSE TO SUBSTRATE
- FOR USE OVER WOOD DECK, RIGID INSULATION WITH BEARING PLATE) OR OPEN FRAMING WITHOUT INSULATION.
- MINIMAL 3/16" GAP PROVIDES JUST ENOUGH FASTENER CLEARANCE.

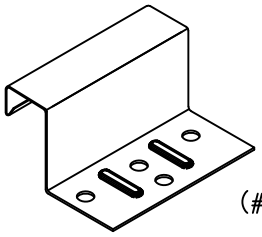

(#SLCLP2FX)

LOW PROFILE FIXED CLIP

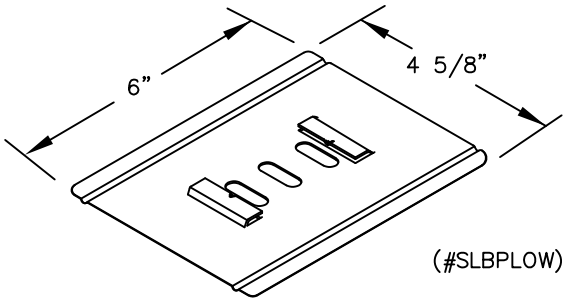

(#SLBPLOW)

BEARING PLATE FOR LOW CLIP

- FOR INSTALLING PANELS OVER RIGID INSULATION

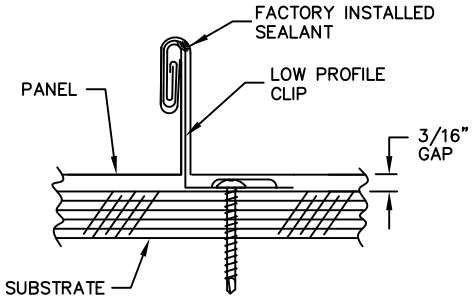

SEAMED LOW CLIP

AEP SPAN

SPANSEAM
(W/ LOW CLIP)

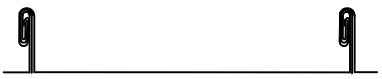

CLIP INFORMATION

SPS-LOW-02

REV. 1/8/21

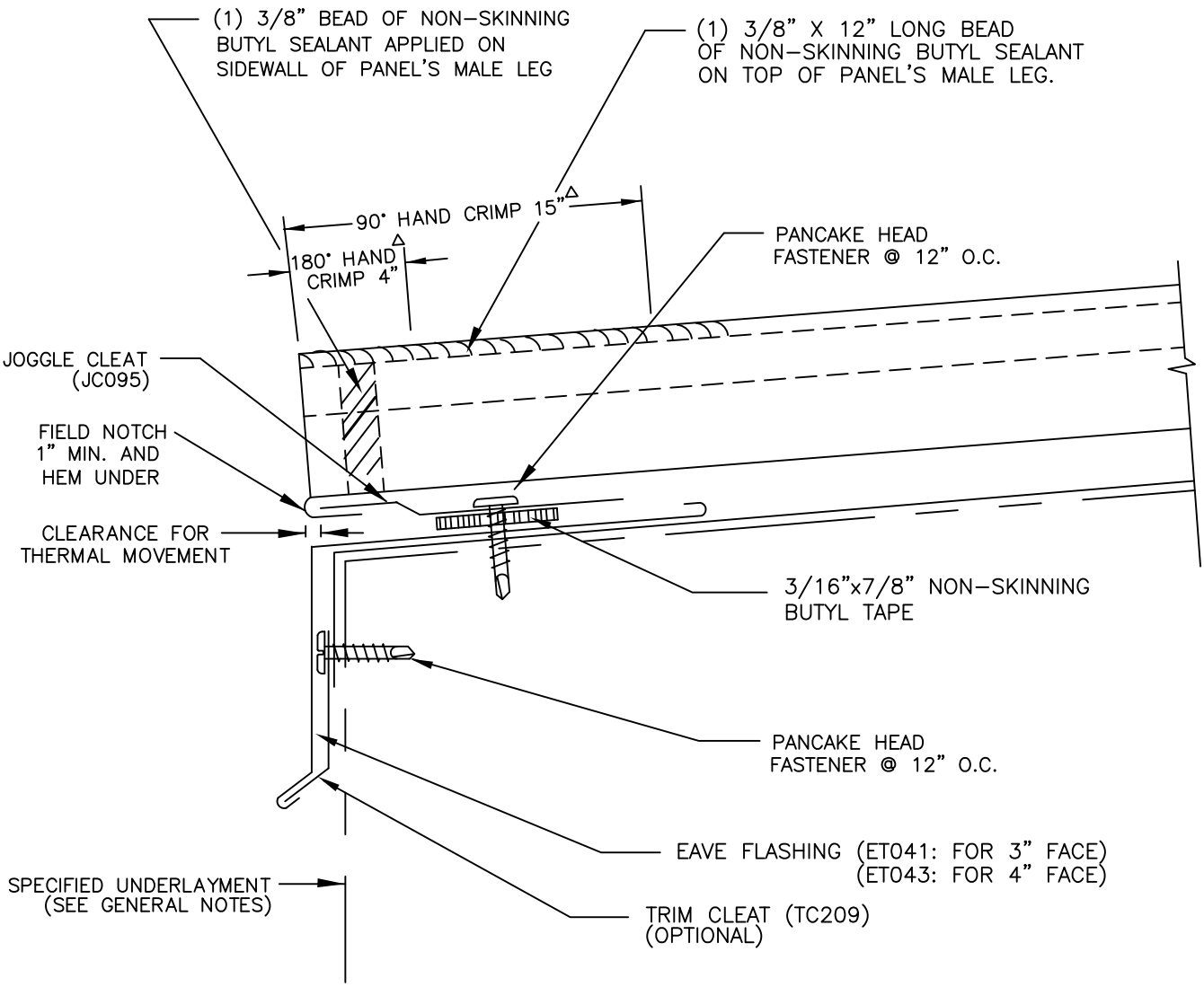

NOTE:
△ – HAND CRIMPING DIMENSIONS REQUIRED TO ACCOMMODATE ELECTRIC SEAMER.

AEP SPAN

SPANSEAM
(W/ LOW CLIP)

EAVE - FLOATING

SPS-LOW-03

REV. 1/8/21

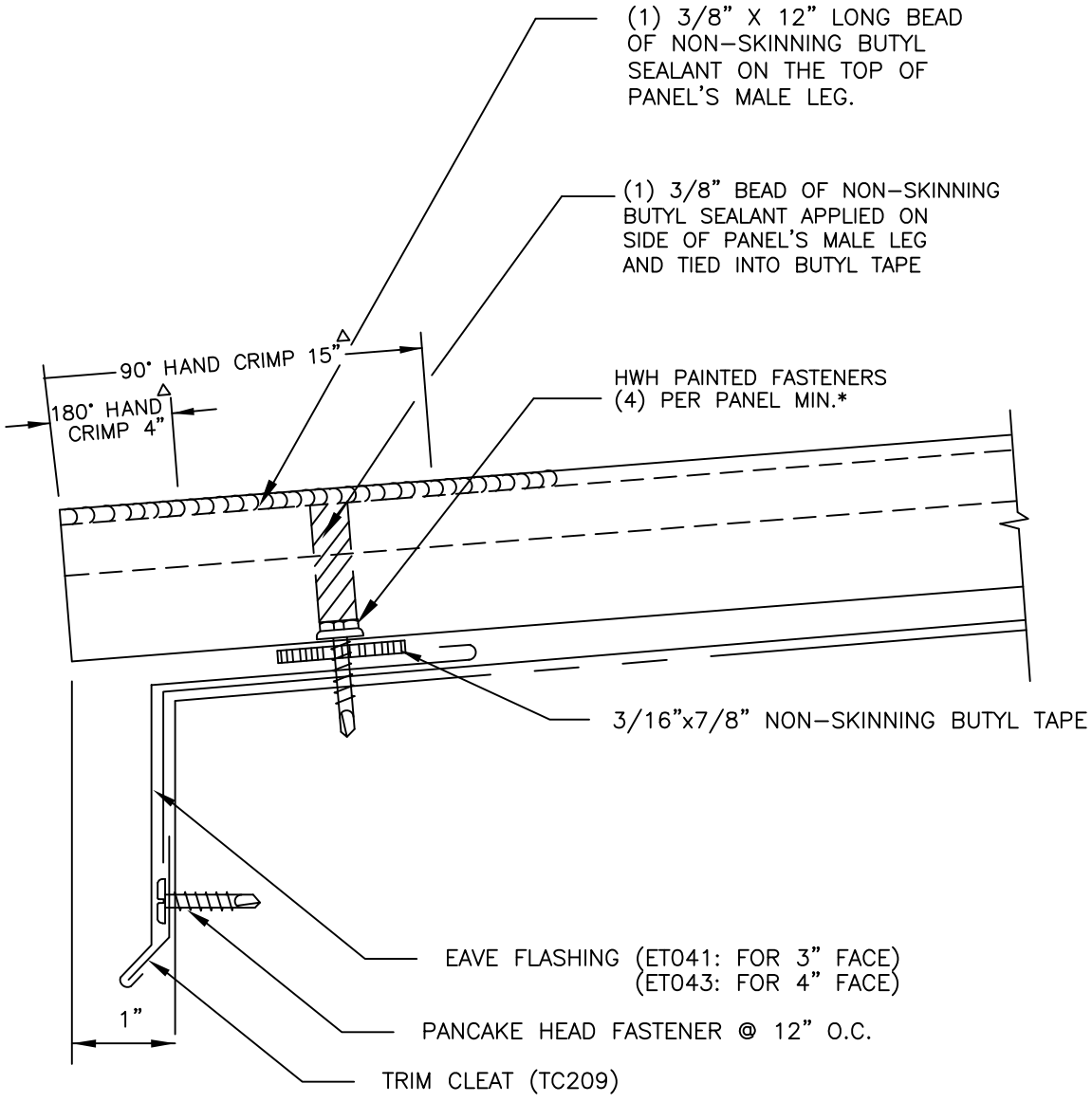

NOTE:
* – ADDITIONAL FASTENERS MAY BE REQUIRED TO RESIST DRAG LOADS.
△ – HAND CRIMPING DIMENSIONS REQUIRED TO ACCOMMODATE ELECTRIC SEAMER.

AEP SPAN

SPANSEAM
(W/ LOW CLIP)

EAVE - FIXED

SPS-LOW-04

REV. 1/8/21

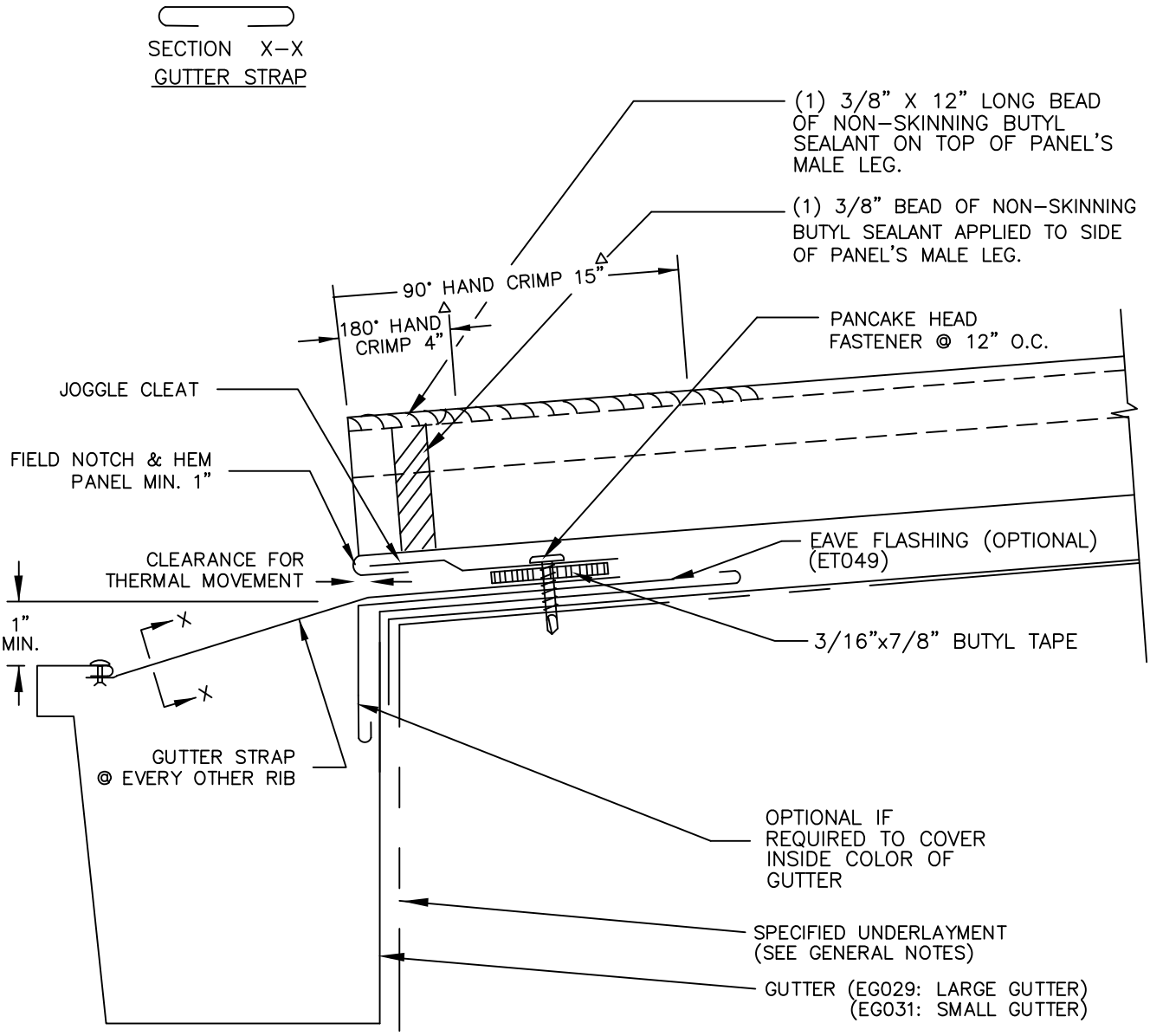

NOTE:
△ – HAND CRIMPING DIMENSIONS REQUIRED TO ACCOMMODATE ELECTRIC SEAMER.

AEP SPAN

SPANSEAM
(W/ LOW CLIP)

EAVE WITH GUTTER
- FLOATING

SPS-LOW-05

REV. 1/8/21

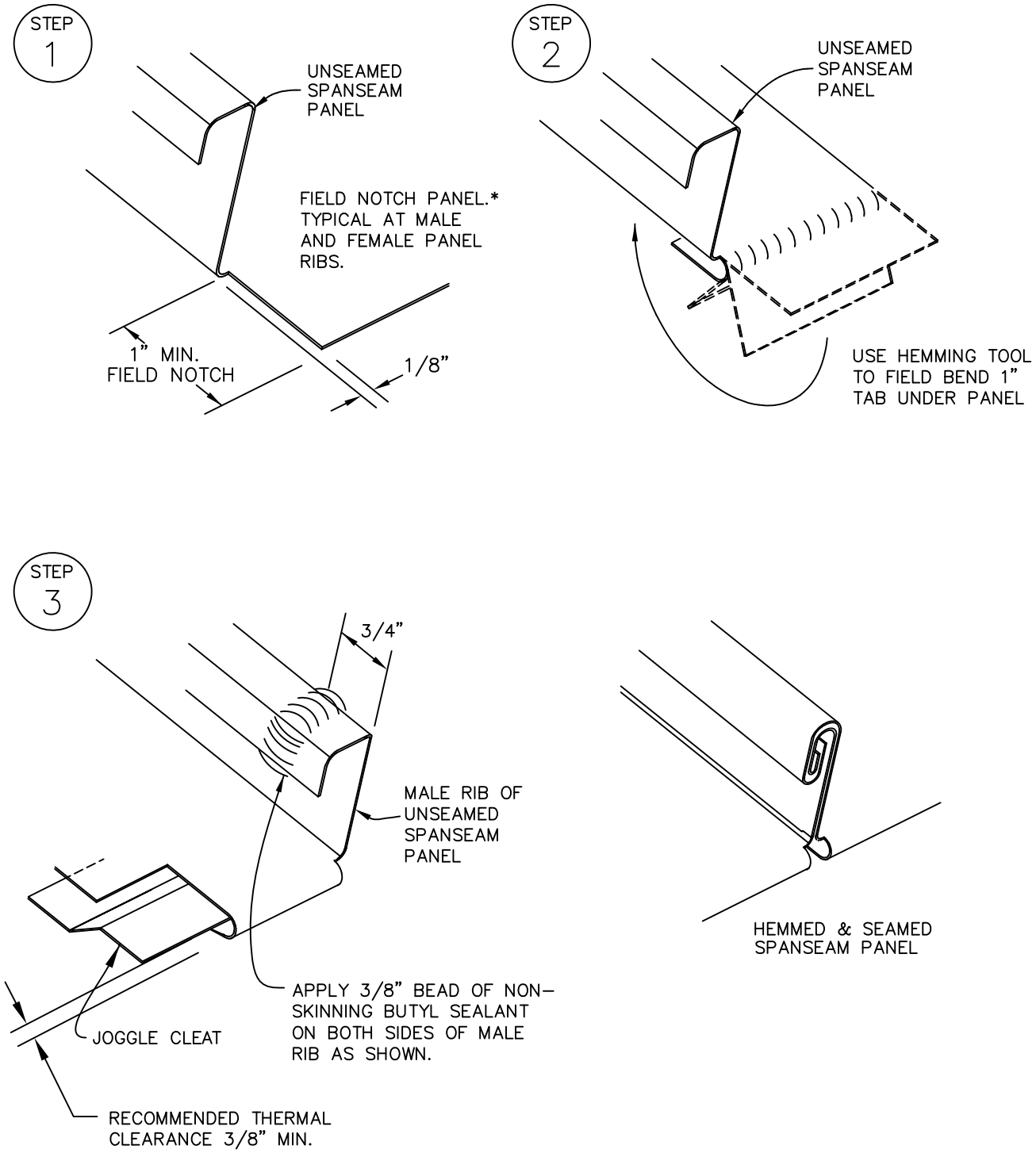

* ASK YOUR AEP SPAN REPRESENTATIVE ABOUT FACTORY NOTCHING.

AEP SPAN

SPANSEAM
(W/ LOW CLIP)

EAVE HEM

SPS-LOW-06

REV. 1/8/21

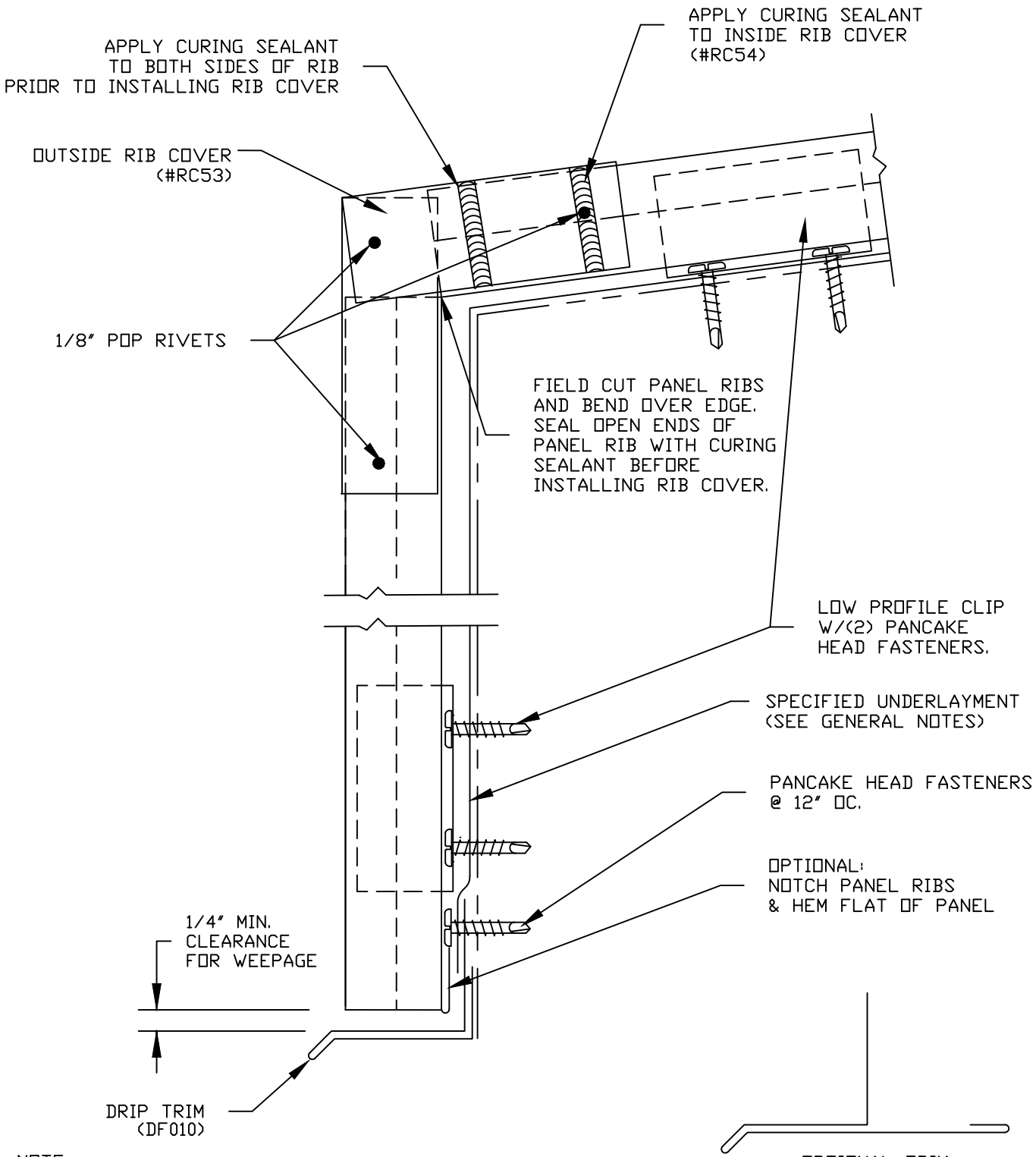

NOTE:
- THIS DETAIL NOT RECOMMENDED IN SNOW CLIMATES.
- REFER TO DETAIL #28 FOR A THREE DIMENSION VERSION OF THIS DETAIL.

AEP SPAN

SPANSEAM
(W/ LOW CLIP)

RIB COVER

SPS-LOW-07

REV. 9/23/26

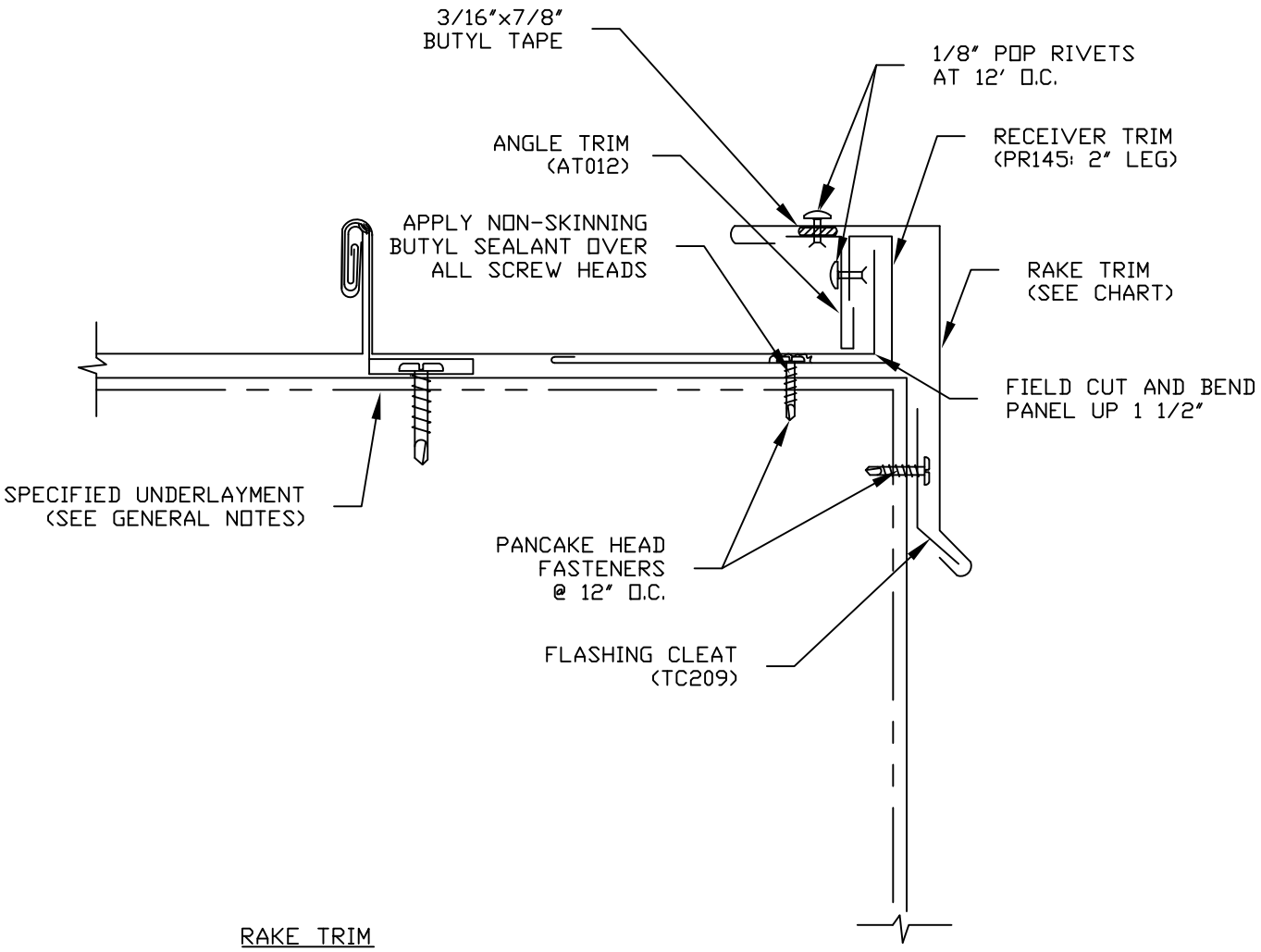

RAKE TRIM

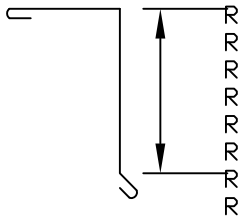

RT175: 4"
RT181: 5 1/4"
RT183: 4 1/2
RT185: 5 1/2"
RT187: 4 3/4"
RT189: 5 3/4
RT191: 5"
RT193: 6"
RT195: 7"

NOTE:
FIELD CUT FIRST
AND LAST PANELS
TO EQUAL WIDTH.

AEP SPAN

SPANSEAM
(W/ LOW CLIP)

RAKE

SPS-LOW-08

REV. 1/8/21

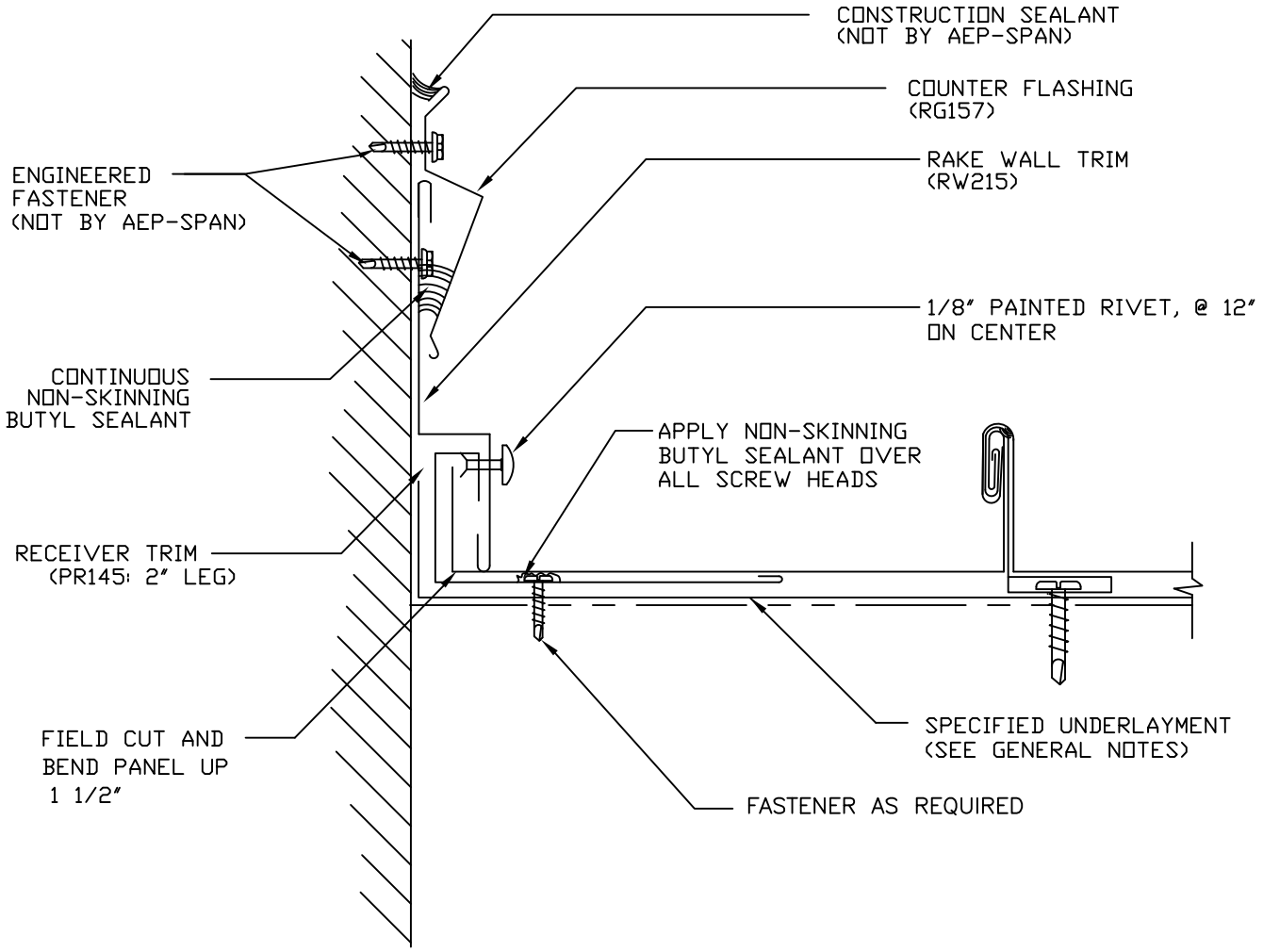

NOTE:
FIELD CUT FIRST
AND LAST PANELS
TO EQUAL WIDTH.

AEP SPAN

SPANSEAM
(W/ LOW CLIP)

RAKE WALL

SPS-LOW-09

REV. 1/8/21

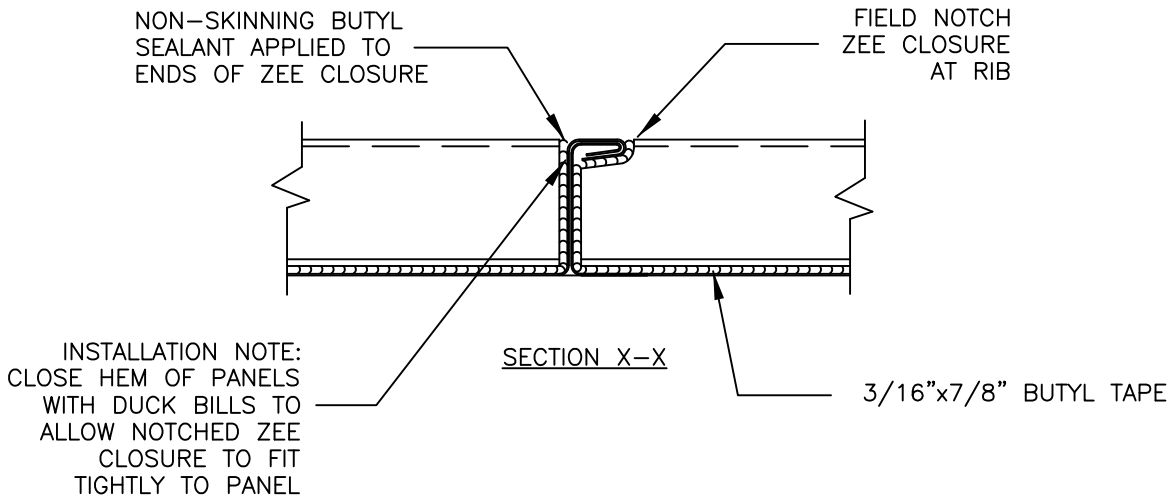

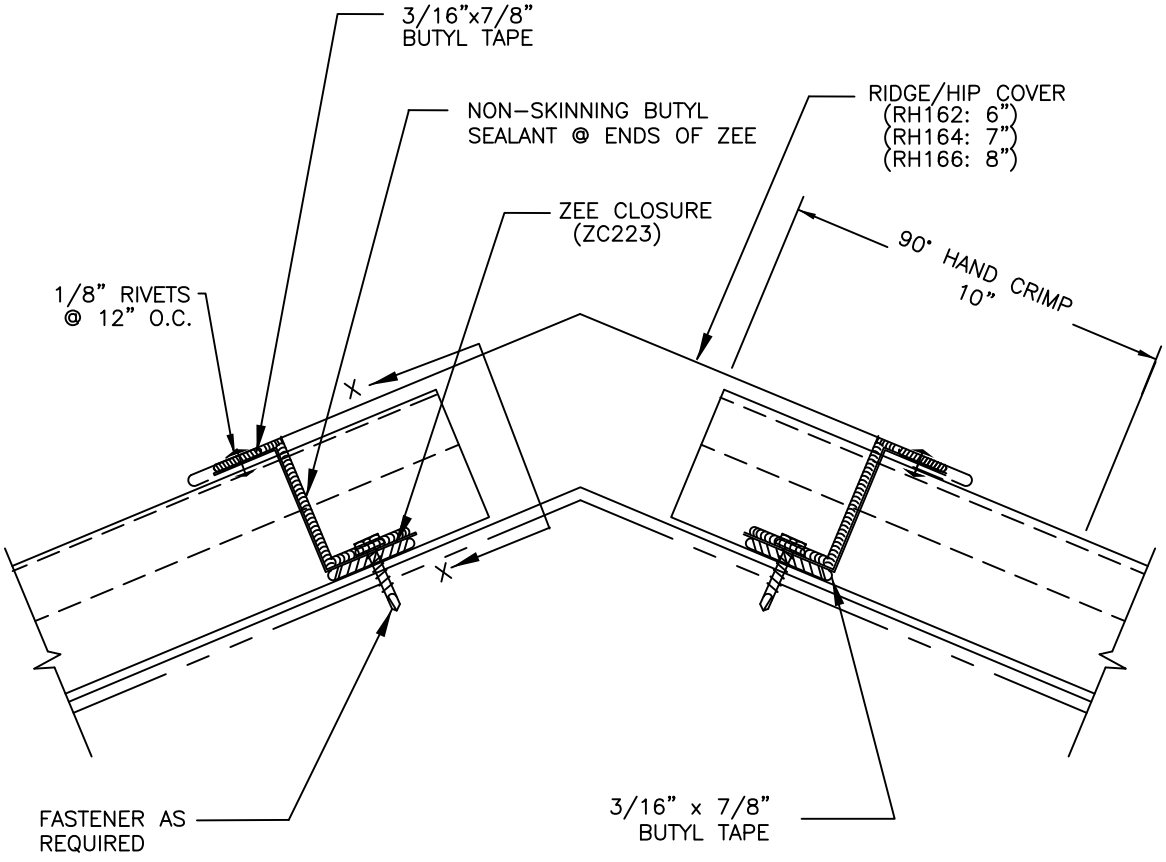

AEP SPAN

SPANSEAM
(W/ LOW CLIP)

RIDGE/HIP - FIXED

SPS-LOW-10

REV. 1/8/21

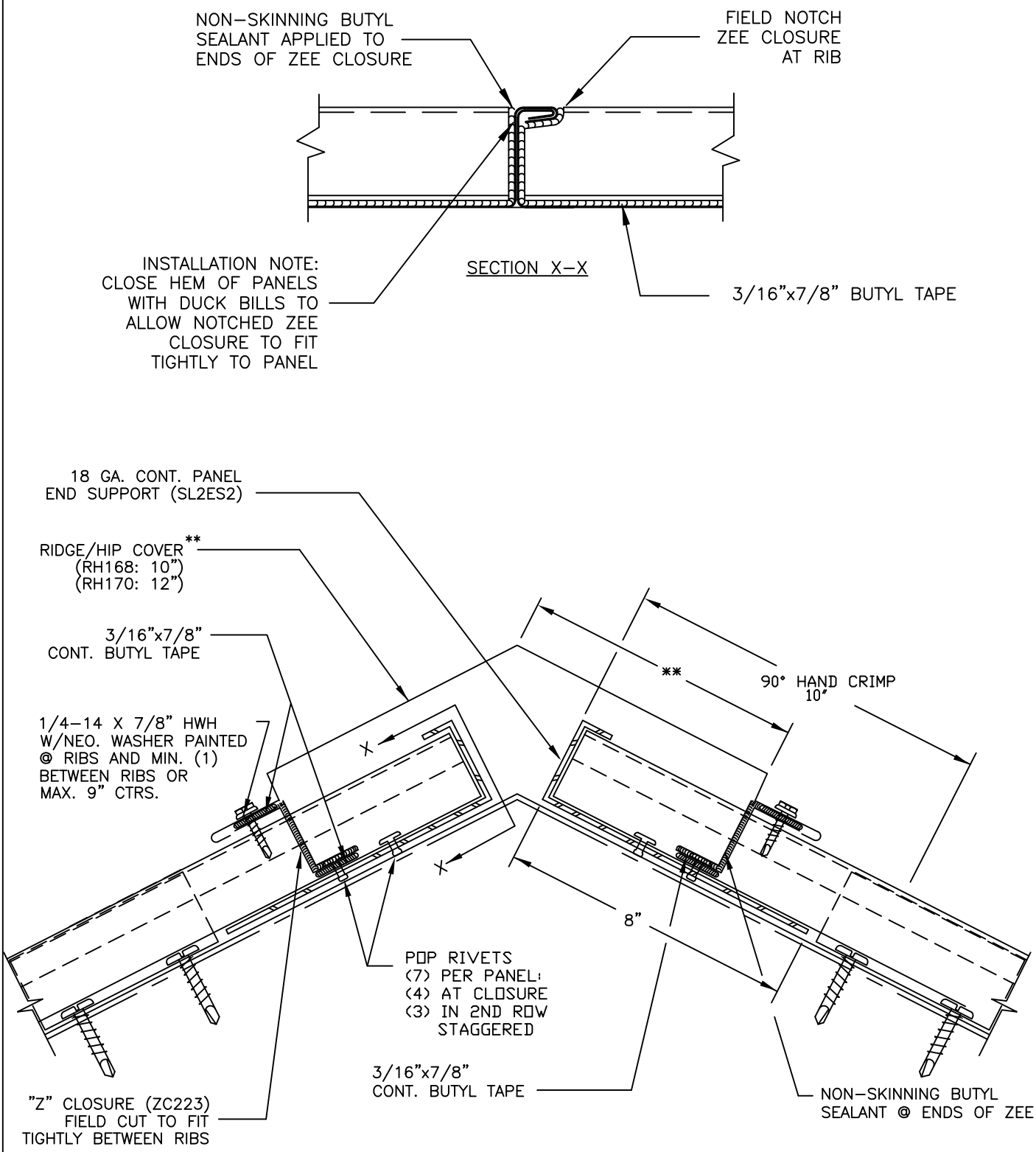

AEP SPAN

SPANSEAM
(W/ LOW CLIP)

RIDGE/HIP - FLOATING

SPS-LOW-11

REV. 1/8/21

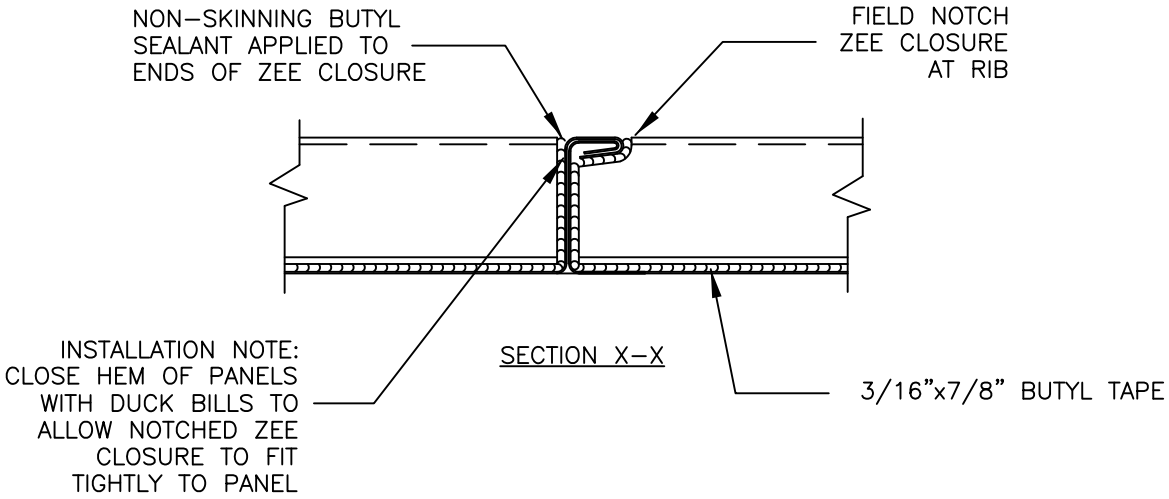

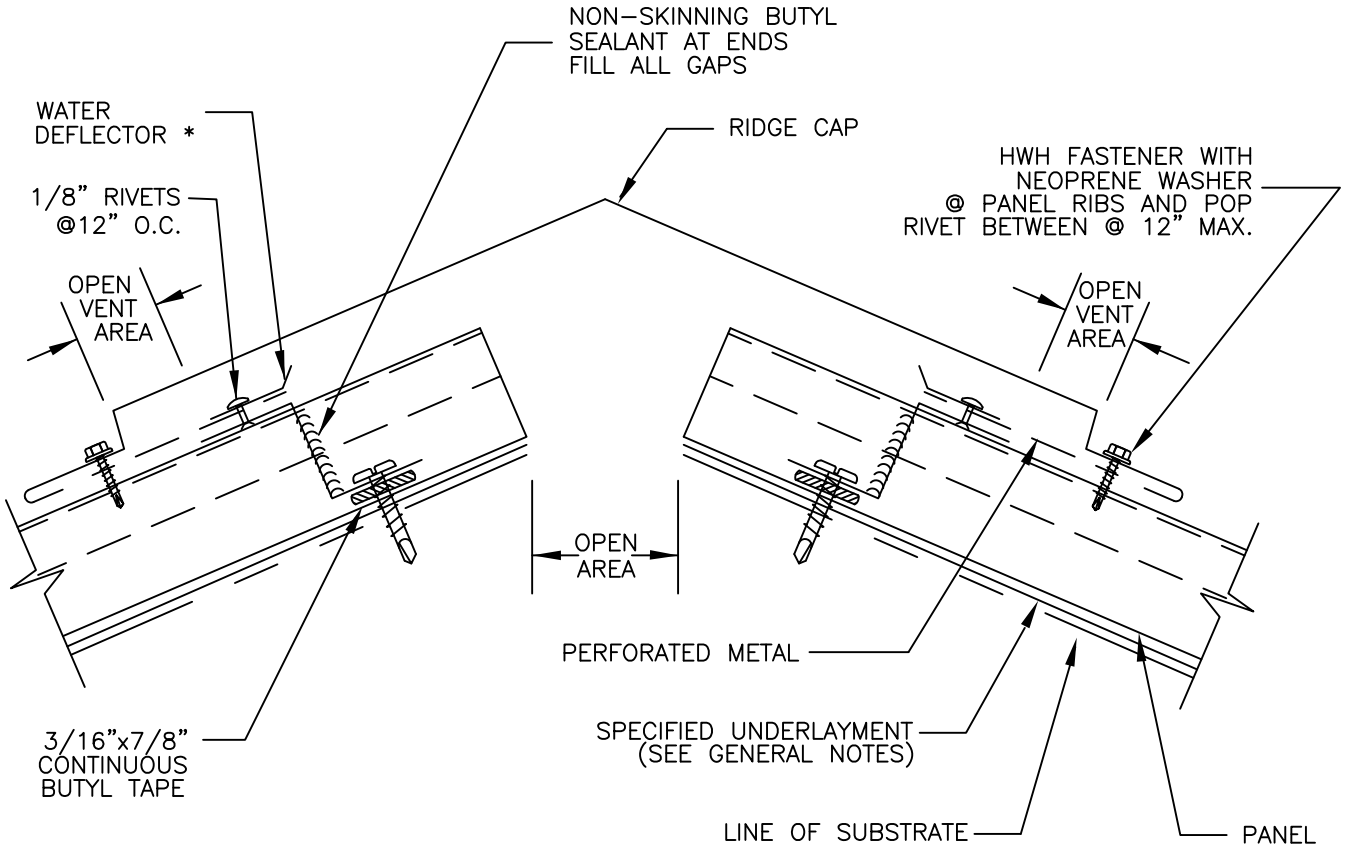

NOTE:
– CUSTOMER MUST PROVIDE VENT AREA REQUIREMENTS.
*– DEFLECTOR USED FOR SEVERE RAIN/SNOW CLIMATES.

AEP SPAN

SPANSEAM
(W/ LOW CLIP)

VENTED RIDGE

SPS-LOW-12

REV. 1/8/21

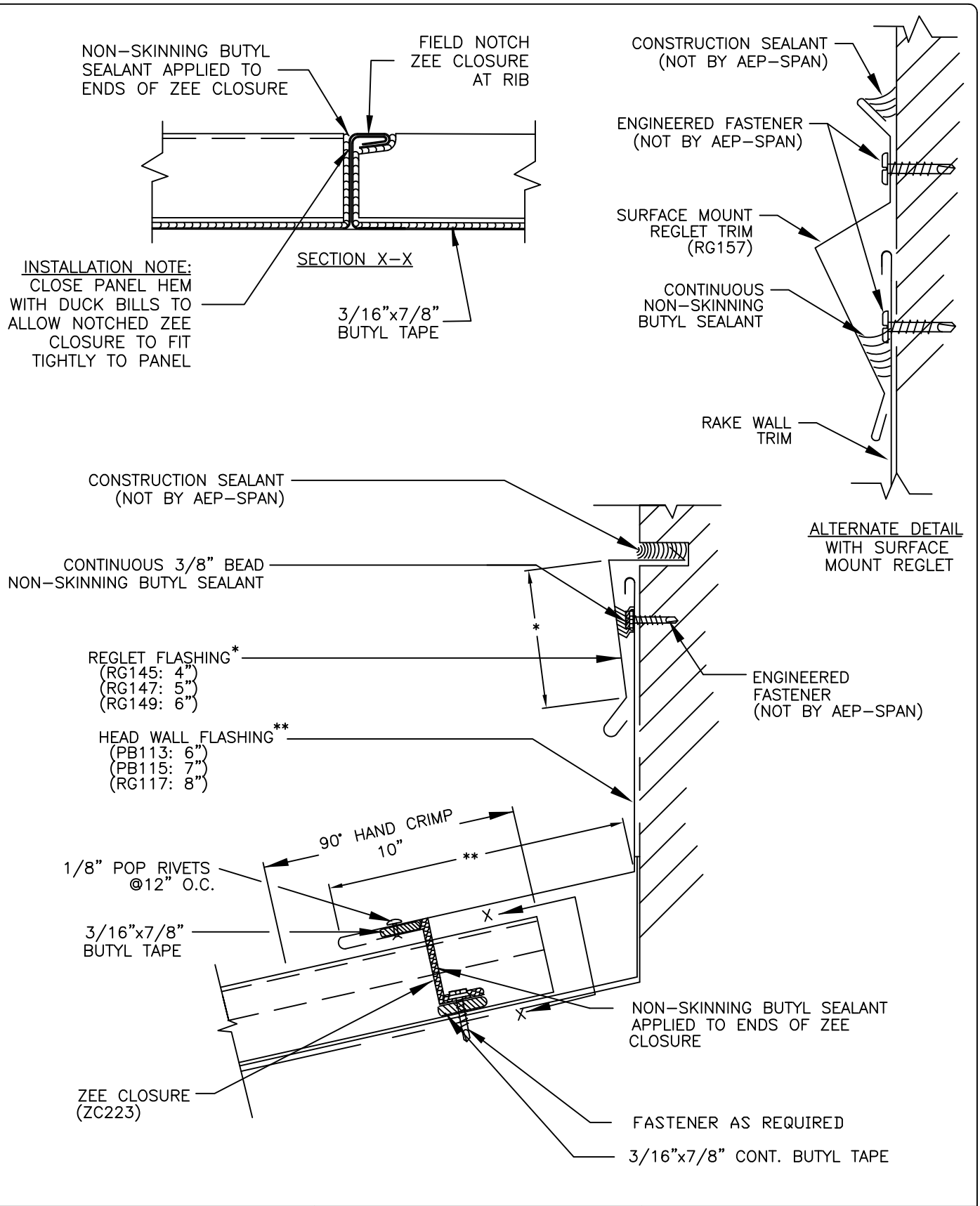

AEP SPAN

SPANSEAM
(W/ LOW CLIP)

HEAD WALL - FIXED

SPS-LOW-13

REV. 1/8/21

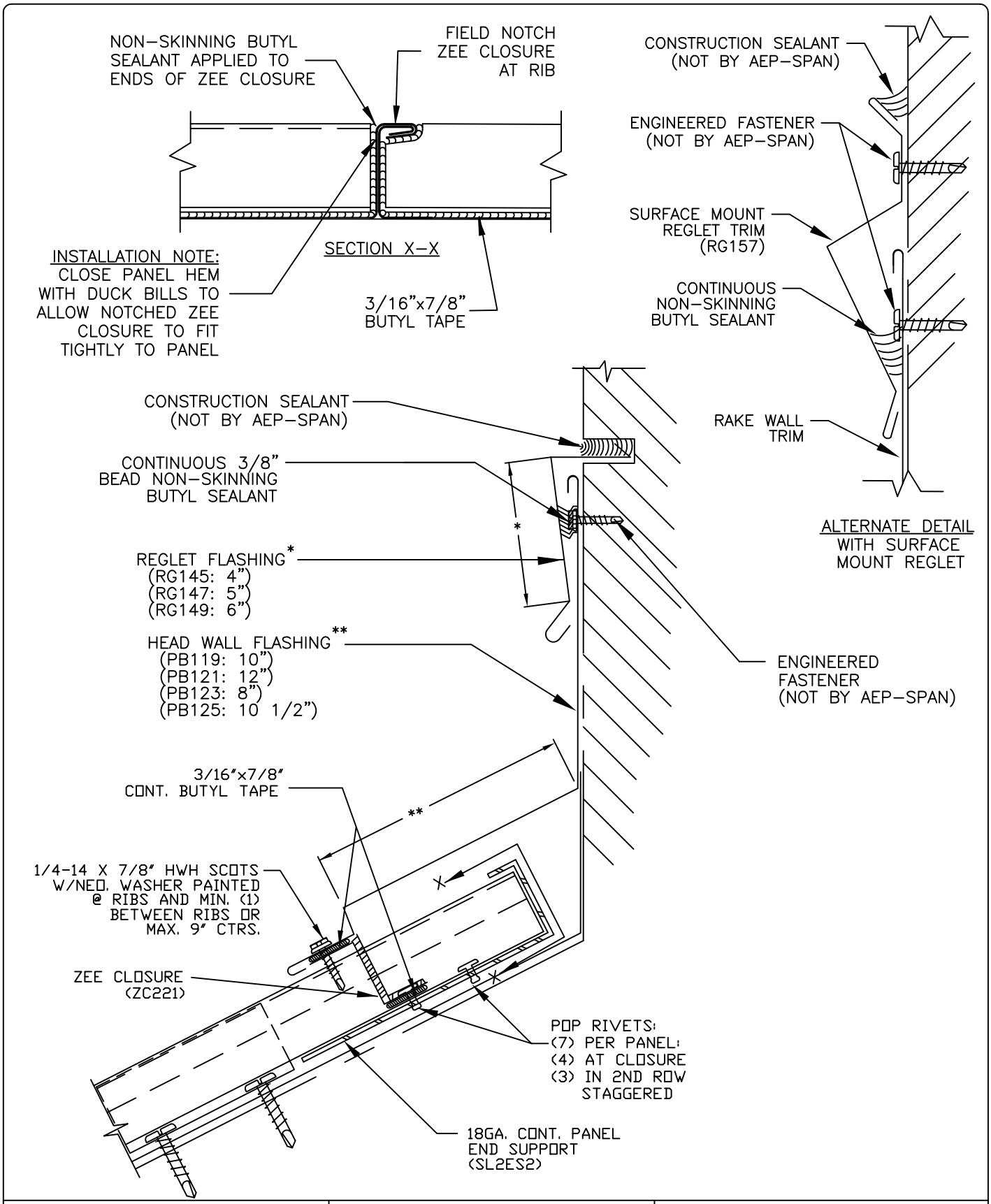

AEP SPAN

SPANSEAM
(W/ LOW CLIP)

HEAD WALL - FLOATING

SPS-LOW-14

REV. 1/8/21

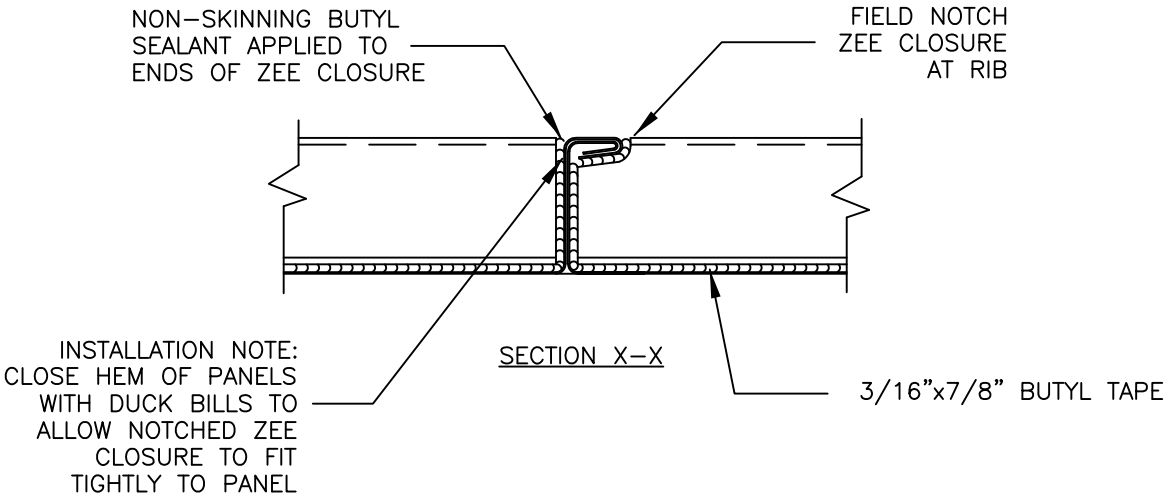

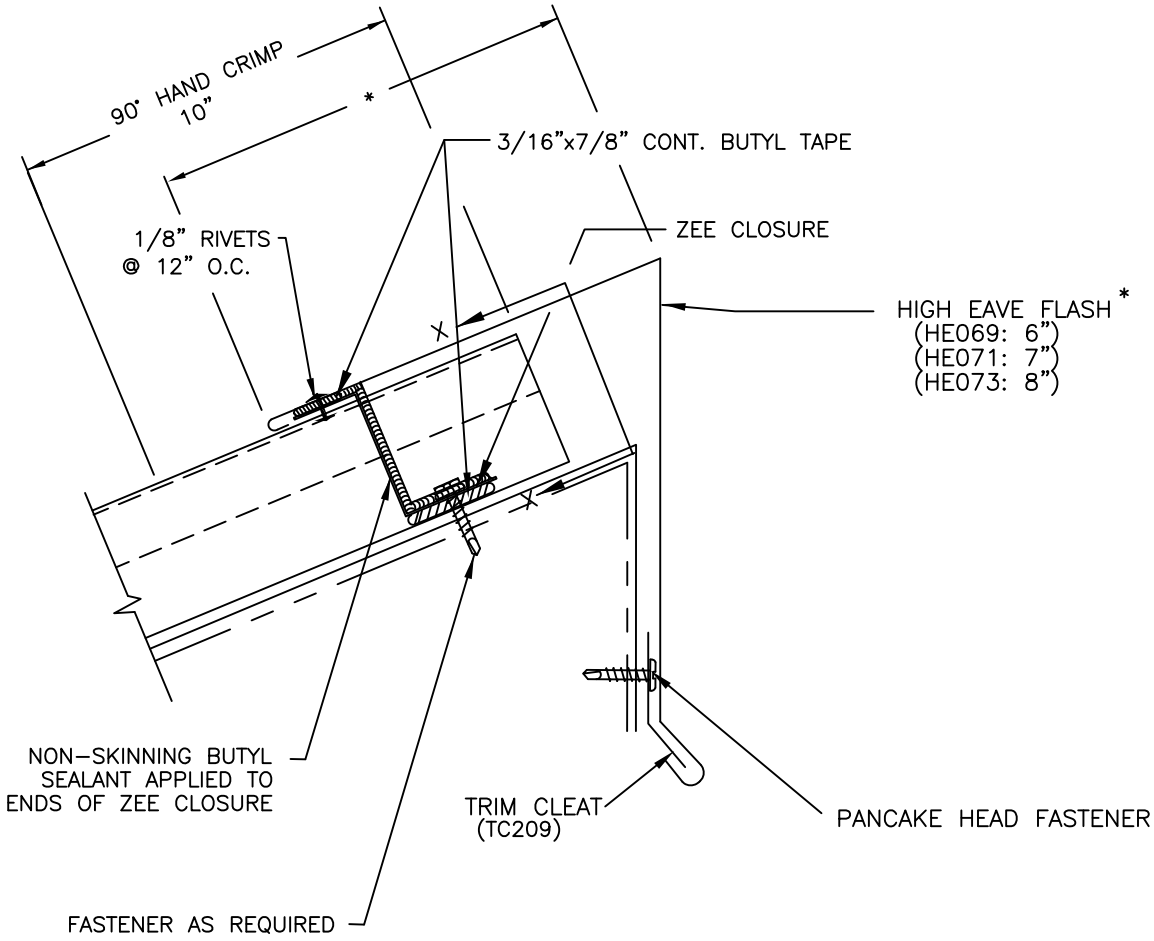

AEP SPAN

SPANSEAM
(W/ LOW CLIP)

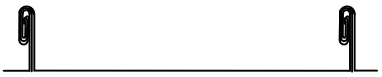

HIGH EAVE - FIXED

SPS-LOW-15

REV. 1/8/21

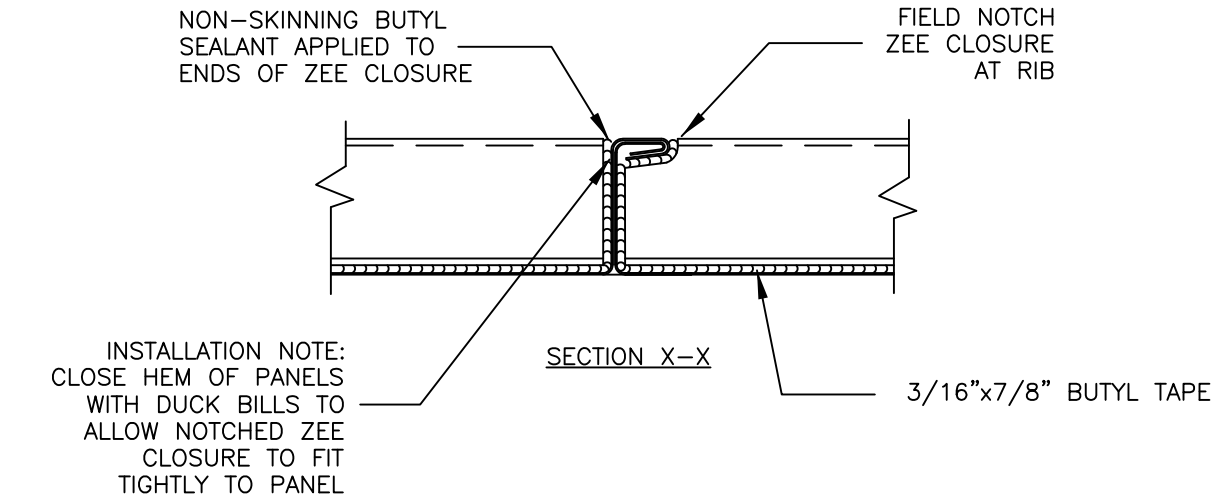

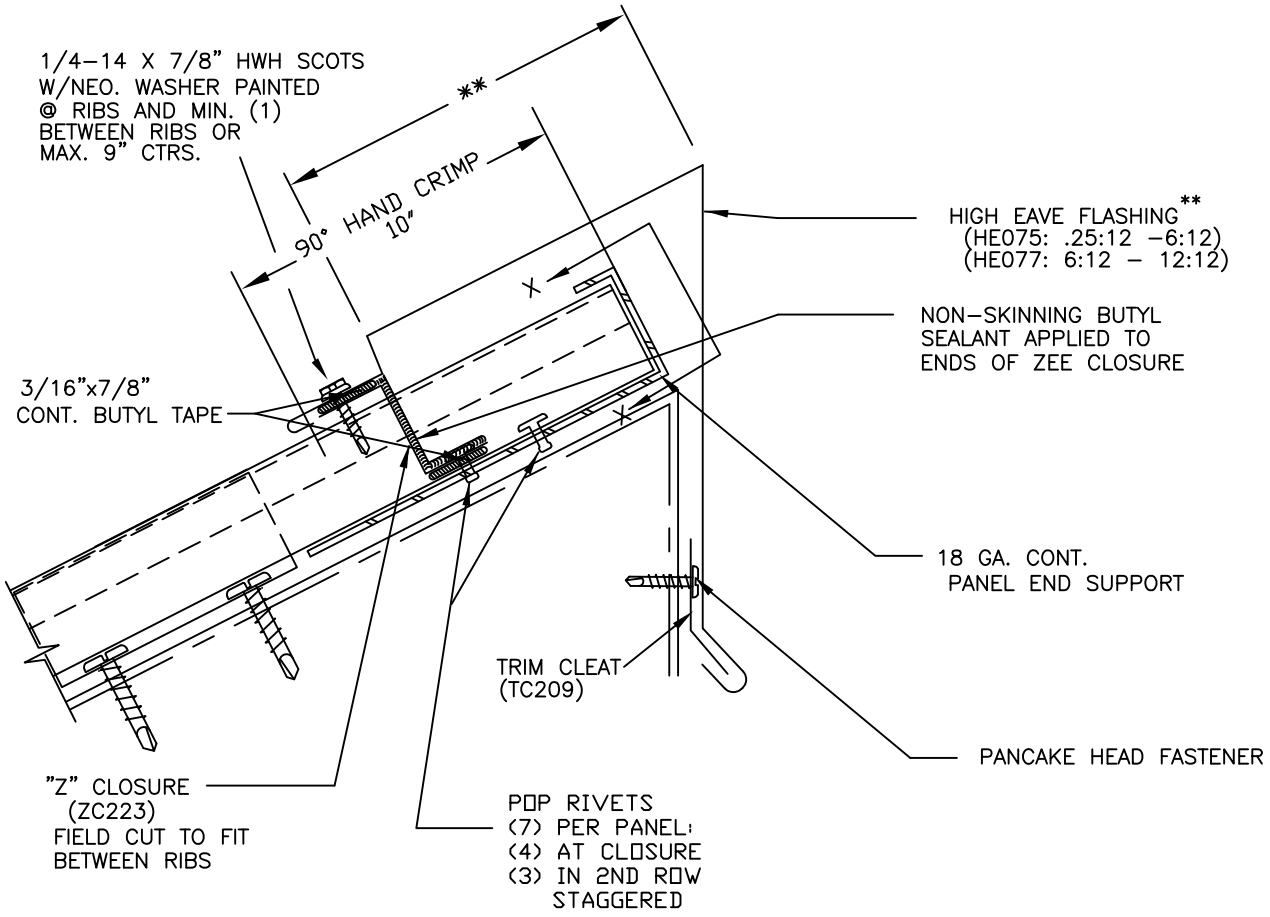

AEP SPAN

SPANSEAM
(W/ LOW CLIP)

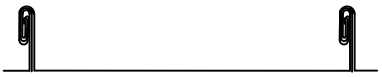

HIGH EAVE - FLOATING

SPS-LOW-16

REV. 1/8/21

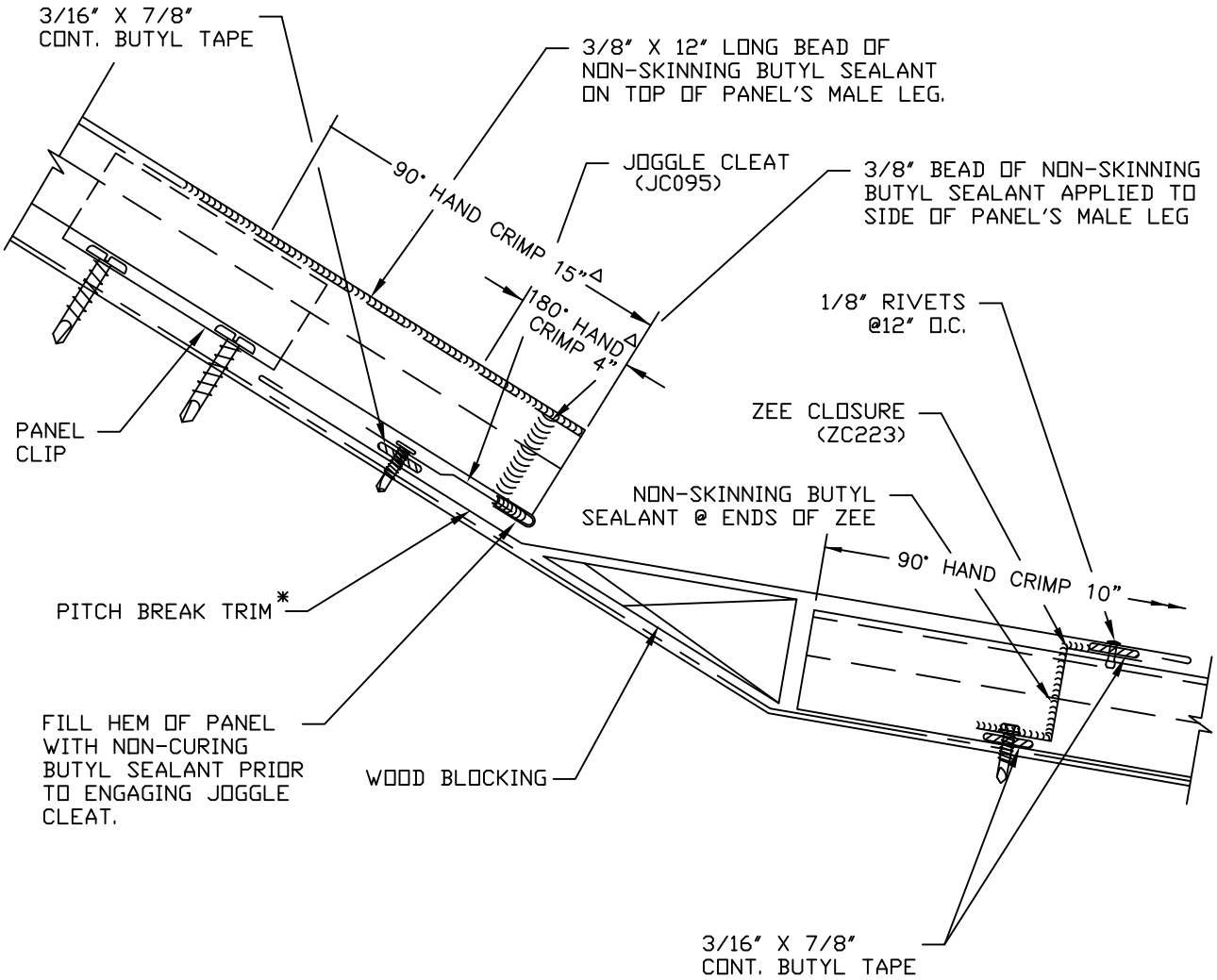

NOTE:
* - SLOPE CHANGE DETERMINES TRIM SIZE.
△ – HAND CRIMPING DIMENSIONS REQUIRED TO ACCOMMODATE ELECTRIC SEAMER.

AEP SPAN

SPANSEAM
(W/ LOW CLIP)

SLOPE TRANSITION
HI-LO

SPS-LOW-17

REV. 1/8/21

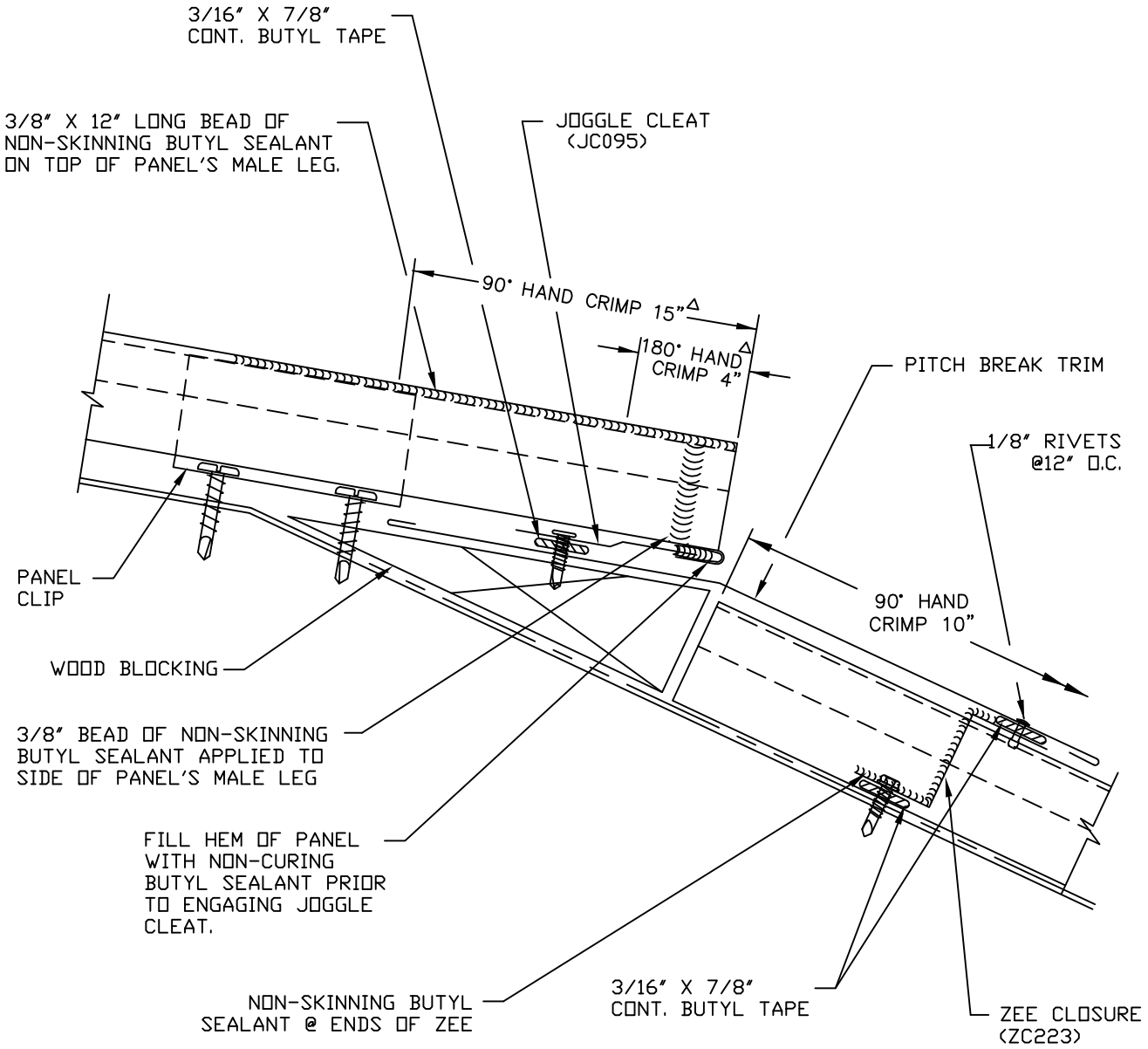

NOTE:
✱ - SLOPE CHANGE DETERMINES TRIM SIZE.
△ – HAND CRIMPING DIMENSIONS REQUIRED TO ACCOMMODATE ELECTRIC SEAMER.

AEP SPAN

SPANSEAM
(W/ LOW CLIP)

SLOPE TRANSITION
LO-HI

SPS-LOW-18

REV. 1/8/21

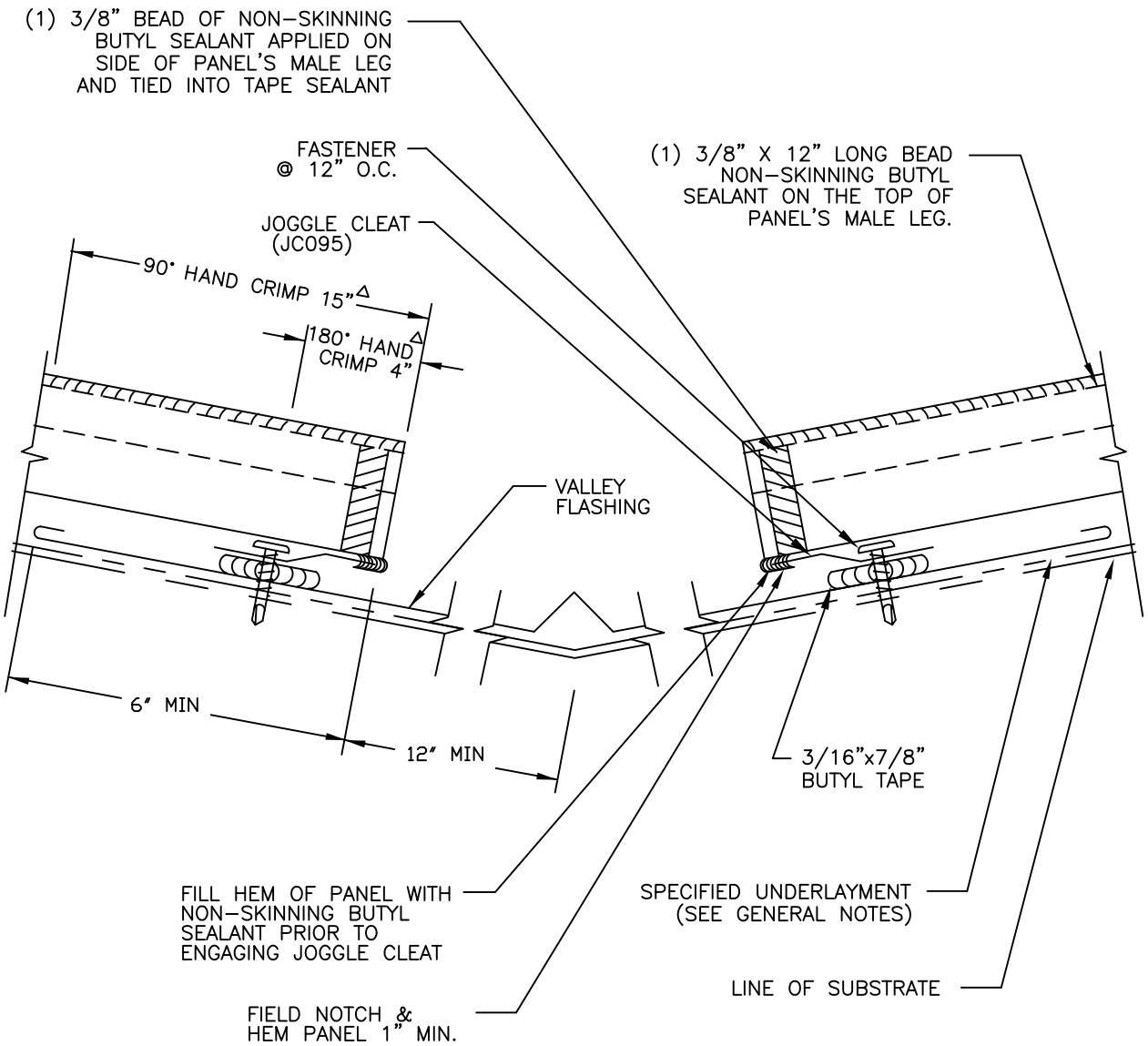

NOTE:
△ – HAND CRIMPING DIMENSIONS REQUIRED TO ACCOMMODATE ELECTRIC SEAMER.

AEP SPAN

SPANSEAM
(W/ LOW CLIP)

VALLEY - FLOATING

SPS-LOW-19

REV. 1/8/21

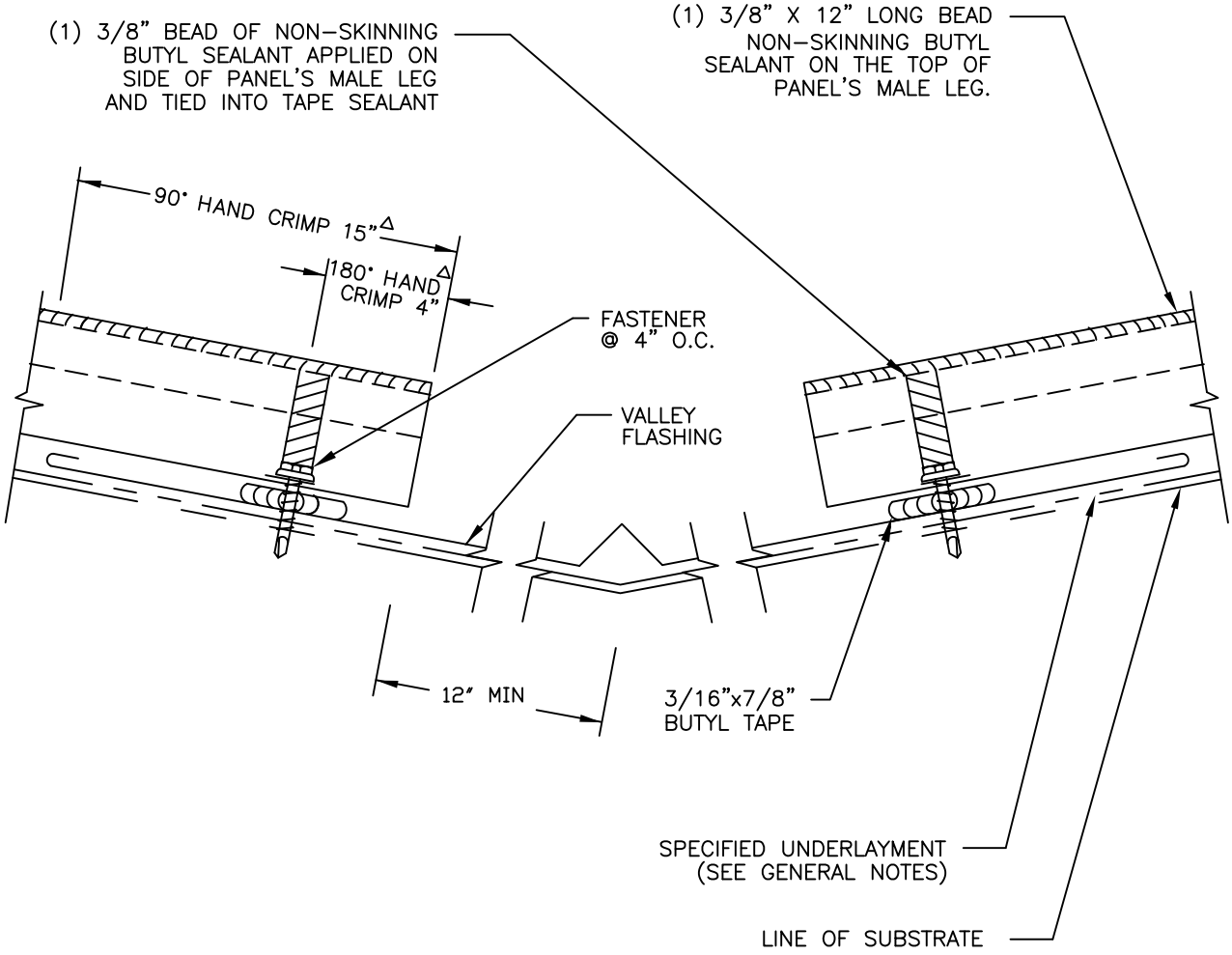

NOTE:
△ – HAND CRIMPING DIMENSIONS REQUIRED TO ACCOMMODATE ELECTRIC SEAMER.

AEP SPAN

SPANSEAM
(W/ LOW CLIP)

VALLEY - FIXED

SPS-LOW-20

REV. 1/8/21

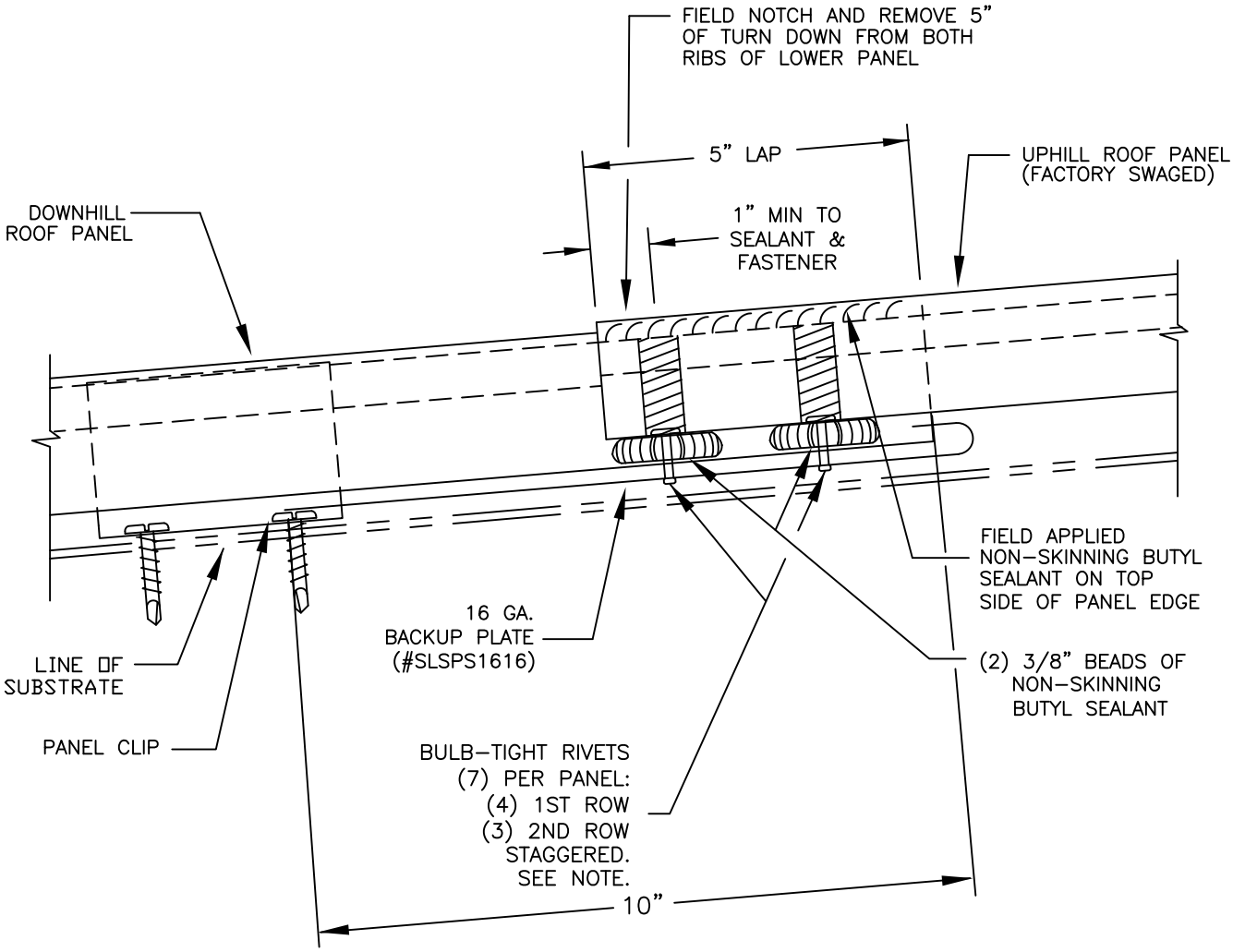

INSTALLATION NOTES:

- SWAGE TOP PANEL ONLY
- PANELS MUST BE INSTALLED LEFT TO RIGHT ONLY
- END LAPS OF ADJACENT PANELS MUST BE STAGGERED AT LEAST ONE PURLIN OR A MINIMUM OF 24" TO PREVENT MATERIAL BUILD-UP AT LAPS.
- (4) 1ST ROW LAP SCREWS MAY BE USED IN LIEU OF (7) BULB RIVETS (2 ROWS) IF INSTALLATION OVER OPEN FRAMING.

AEP SPAN

SPANSEAM
(W/ LOW CLIP)

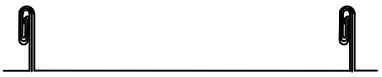

PANEL LAP - FLOATING

SPS-LOW-21

REV. 1/8/21

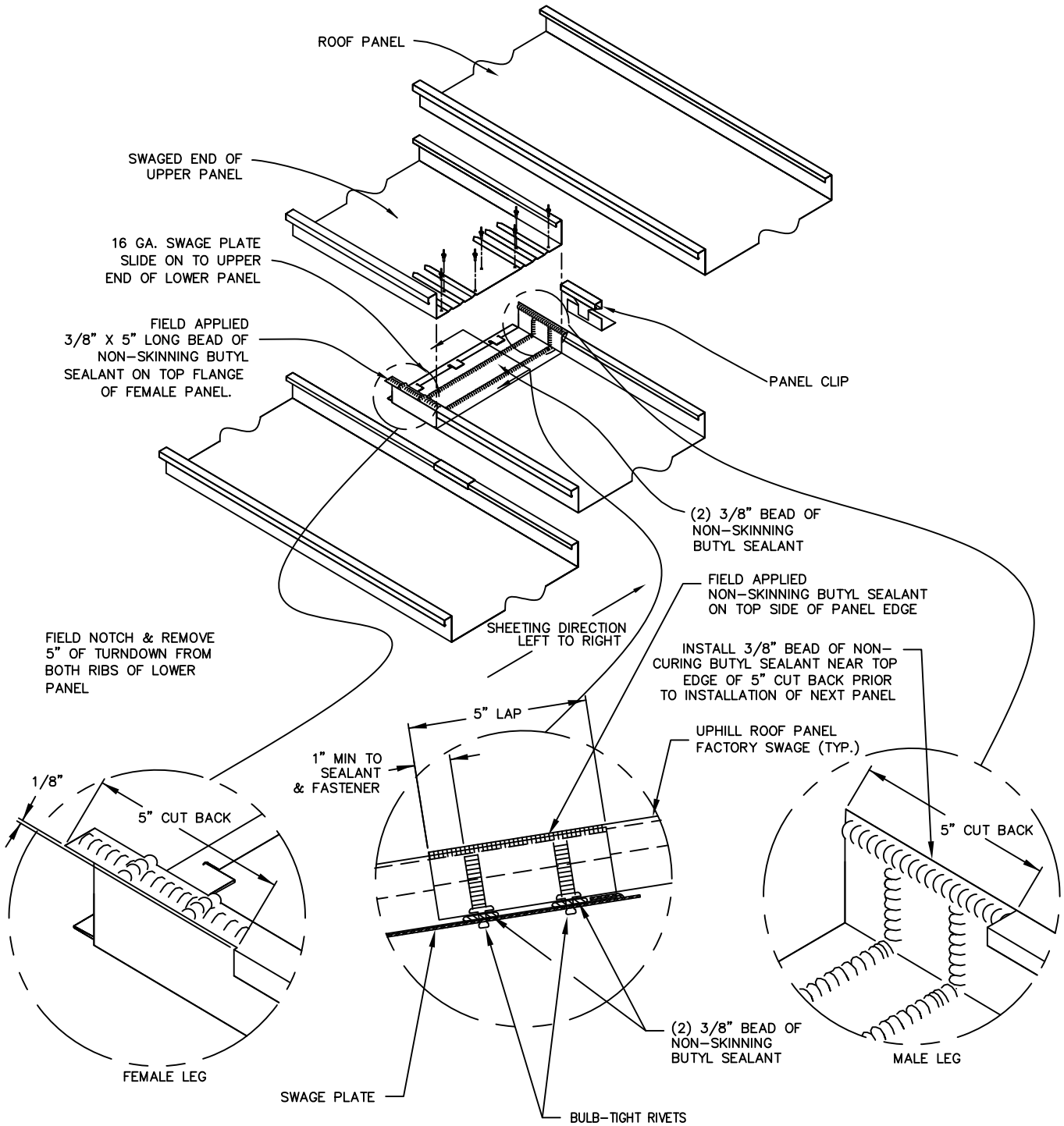

INSTALLATION NOTES:
END LAP OF ADJACENT PANEL MUST BE STAGGERED 24" MINIMUM TO PREVENT MATERIAL BUILDUP AT LAPS

(4) 1ST ROW LAP SCREWS MAY BE USED IN LIEU OF (7) BULB RIVETS (2 ROWS) IF INSTALLATION OVER OPEN FRAMING.

AEP SPAN

SPANSEAM
(W/ LOW CLIP)

PANEL LAP - FLOATING

SPS-LOW-22

REV. 1/8/21

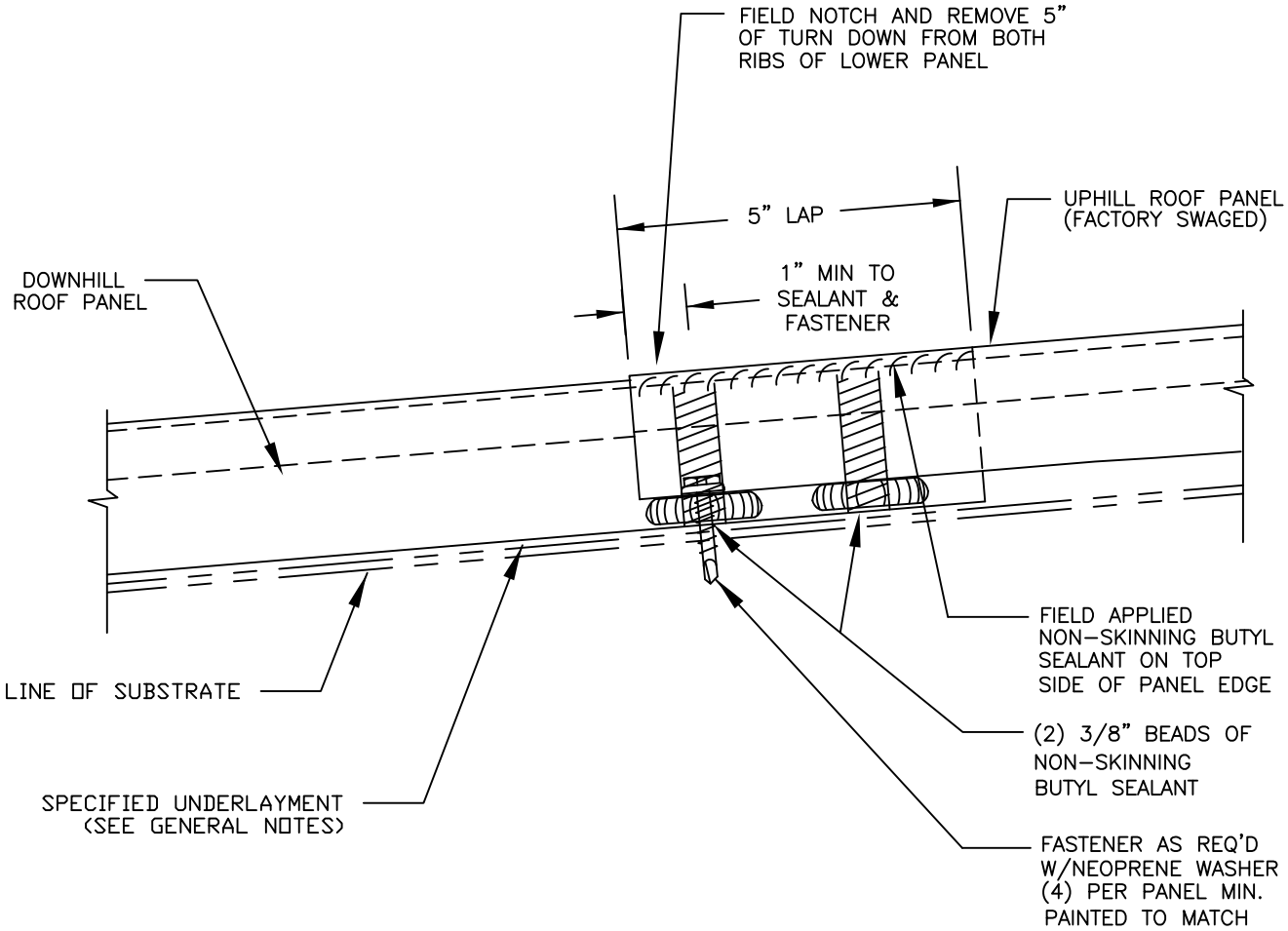

INSTALLATION NOTES:

- SWAGE TOP PANEL ONLY
- PANELS MUST BE INSTALLED LEFT TO RIGHT ONLY
- END LAPS OF ADJACENT PANELS MUST BE STAGGERED AT LEAST ONE PURLIN OR A MINIMUM OF 24" TO PREVENT MATERIAL BUILD-UP AT LAPS.

AEP SPAN

SPANSEAM
(W/ LOW CLIP)

PANEL LAP - FIXED

SPS-LOW-23

REV. 1/8/21

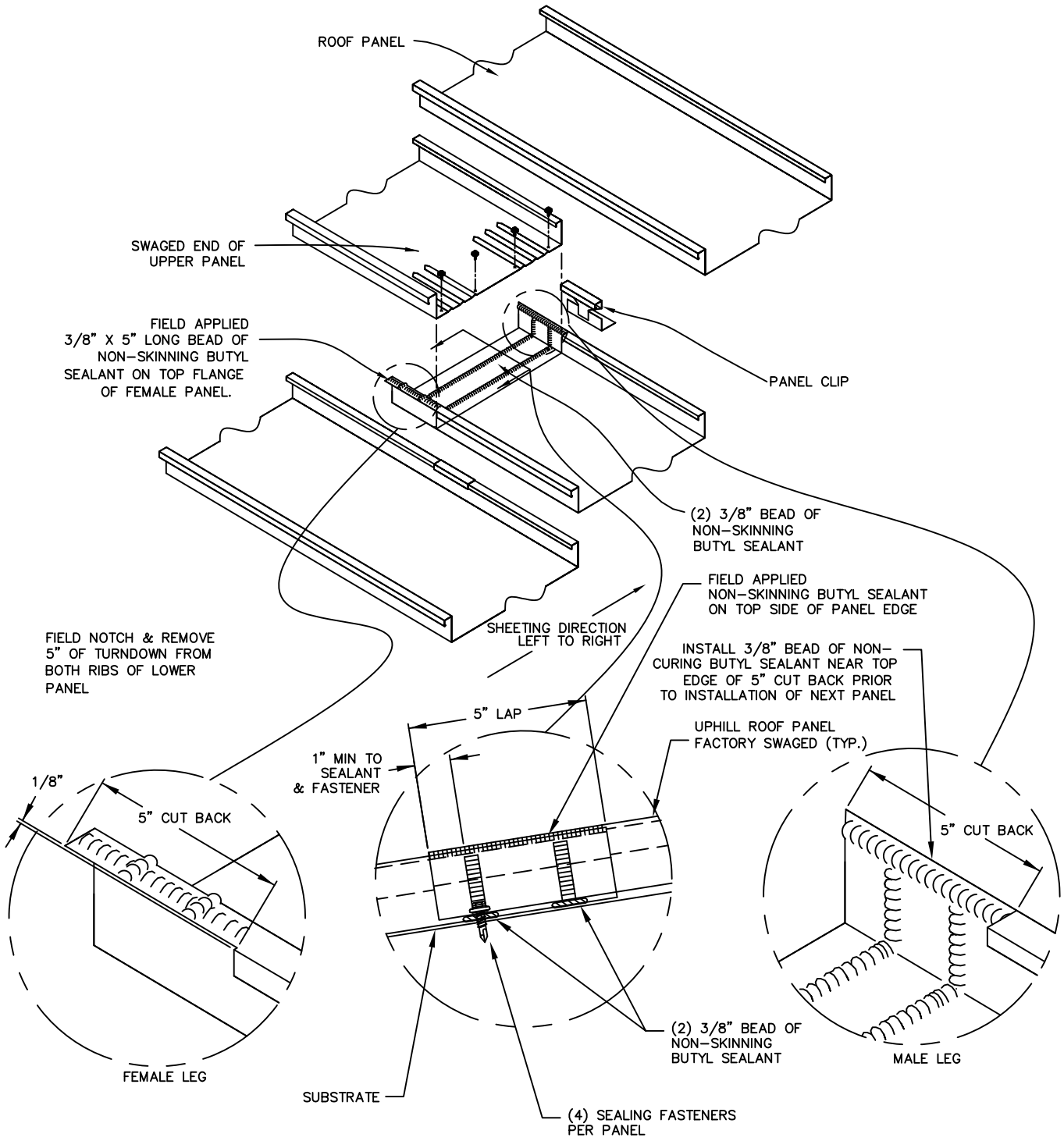

INSTALLATION NOTE
END LAP OF ADJACENT PANEL MUST BE STAGGERED 24" MINIMUM TO PREVENT MATERIAL BUILDUP AT LAPS

AEP SPAN

SPANSEAM
(W/ LOW CLIP)

PANEL LAP - FIXED

SPS-LOW-24

REV. 1/8/21

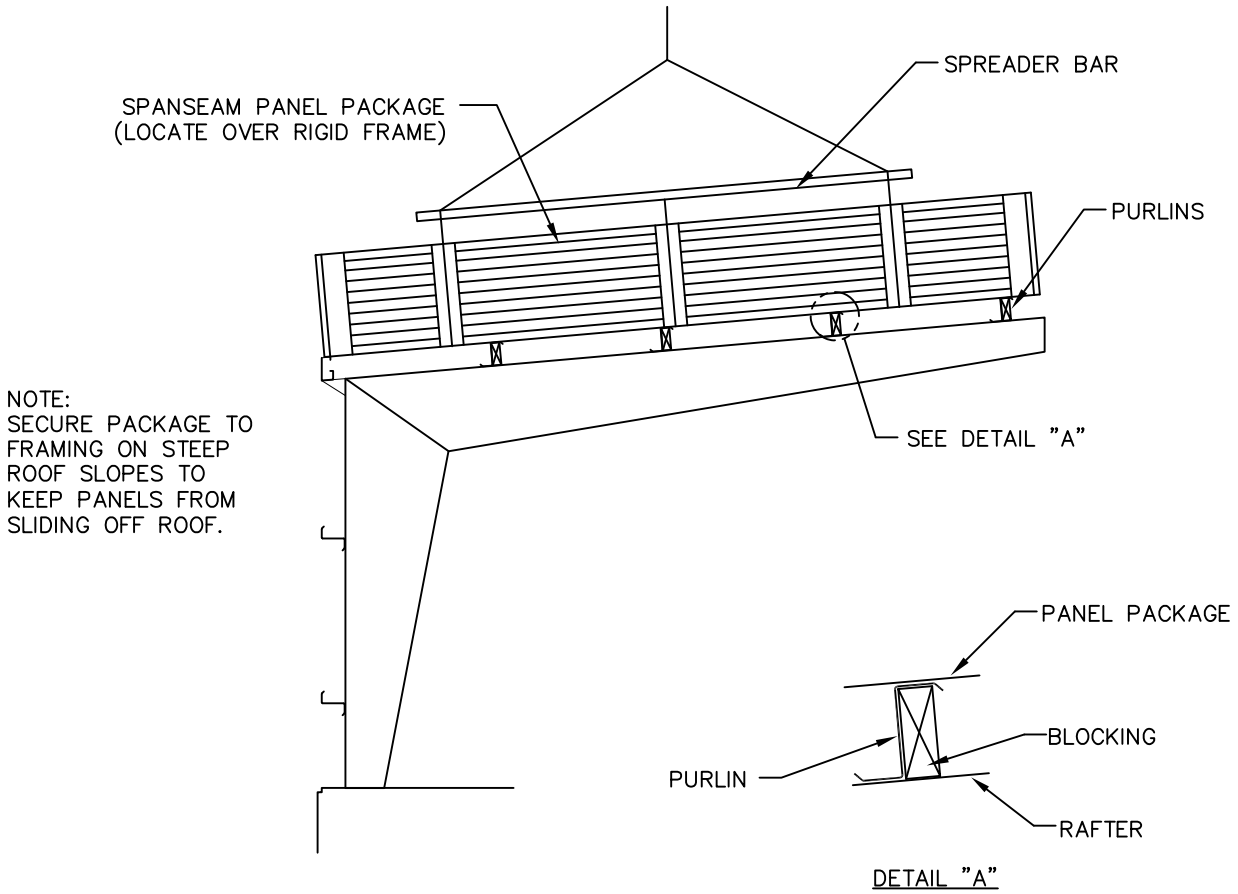

TO FACILITATE THE HANDLING OF SPANSEAM PANELS, PANEL PACKAGES CAN BE LIFTED AND PLACED ON THE ROOF IF LOCATED AT A RIGID FRAME AND WITH BLOCKING PLACED TO PREVENT THE PURLINS FROM ROLLING OVER.

WHEN LIFTING PACKAGED SHEETS, MAKE CERTAIN THAT THEY ARE ADEQUATELY SUPPORTED, PANELS LESS THAN 20' IN LENGTH CAN NORMALLY BE LIFTED WITH A FORKLIFT: WHEN LIFTING PANELS IN EXCESS OF 20', IT IS RECOMMENDED THAT A SPREADER BAR AND SLINGS BE USED. AS A RULE WHEN LIFTING, NO MORE THAN 1/3 OF THE LENGTH OF THE PANEL SHOULD BE LEFT UNSUPPORTED, AND NO MORE THAN 8' SHOULD BE CANTILEVERED BEYOND SPREADER BARS.

AEP SPAN

SPANSEAM
(W/ LOW CLIP)

PANEL PACKAGE HANDLING

SPS-LOW-25

REV. 1/8/21

GABLE BUILDINGS WITHOUT PANEL ENDLAPS CAN BE SHEETED SIMULTANEOUSLY FROM EITHER END OF THE BUILDING. HOWEVER, IF THE BUILDING HAS PANEL ENDLAPS, THE ROOF MUST BE SHEETED LEFT TO RIGHT LOOKING UP THE SLOPE.

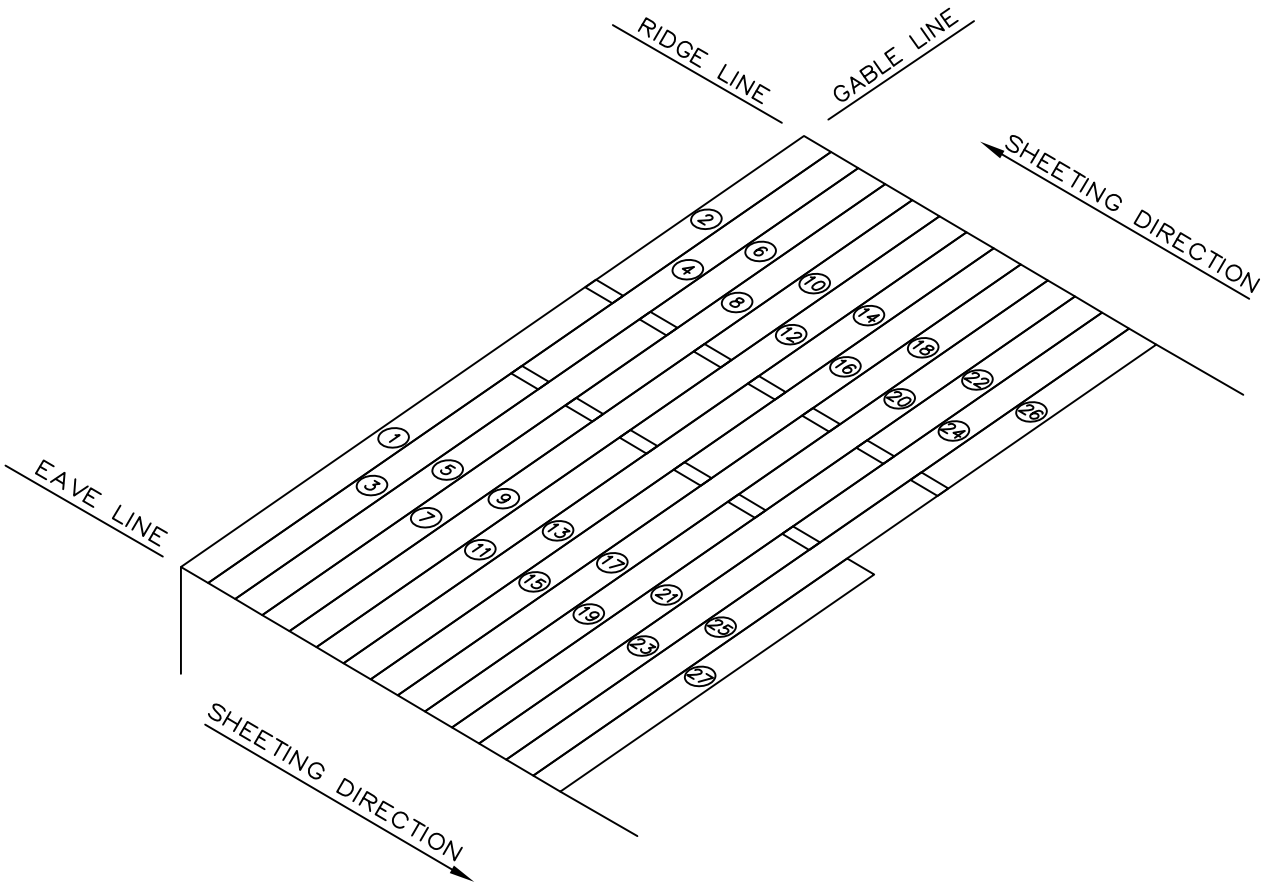

SHEETING DIRECTION AND PANEL SEQUENCE

THE SHEETING SEQUENCE FOR THE SPANSEAM PANEL IS AS INDICATED ABOVE. PLEASE NOTE THE PLACEMENT OF THE PANELS BY THE CIRCLED NUMBERS. THE UPHILL PANEL AT AN ENDLAP WILL BE SWAGED ON THE LOWER END FOR NESTING PURPOSES. END-LAPS OF ADJACENT PANELS MUST BE STAGGERED AT LEAST ONE PURLIN SPACE, OR A MINIMUM 24", TO PREVENT MATERIAL BUILD-UP.

AEP SPAN	SPANSEAM (W/ LOW CLIP)	PANEL INSTALLATION LAYOUT
		SPS-LOW-26

REV. 1/8/21

PANEL SEAMING

ROOF PERFORMANCE
THE ROOF PANELS MUST BE CORRECTLY SEAMED BEFORE THE ROOF SYSTEM CAN PROVIDE THE FULLY DESIGNED WIND LOAD AND WEATHER RESISTANCE CAPABILITY.

WHEN TO SEAM
WHENEVER POSSIBLE, THE INSTALLED ROOF PANELS SHOULD BE SEAMED BY THE FINISH OF EACH DAY'S WORK. IF HIGH WIND OR RAIN/SNOW CONDITIONS ARE IMMINENT, THE INSTALLED ROOF PANELS MUST BE SEAMED BEFORE SUCH CONDITIONS OCCUR.

TEMPORARY SEAMING
IT MAY NOT ALWAYS BE PRACTICAL OR FEASIBLE TO SEAM THE ROOF PANELS UNTIL AFTER THE ROOF PANEL INSTALLATION IS COMPLETE. SEAMED ROOF PANELS ARE DIFFICULT TO REPOSITION OR REPLACE. SEAMERS MAY NOT ALWAYS BE AVAILABLE DURING THE ENTIRE ROOF INSTALLATION. IN SUCH CASES, IT MAY BE DESIRABLE TO TEMPORARILY HAND CRIMP THE ROOF PANELS AT CLIPS, THEN LATER COMPLETE THE INSTALLATION WITH THE SEAMER.

IMPORTANT: TEMPORARY HAND CRIMPING MUST BE APPROVED BY THE PROJECT'S DESIGNER.

SEAMER NOTES / SPECIFICATIONS
ALL AEP SPAN CUSTOMERS MUST WORK DIRECTLY WITH DI ROOF SEAMERS OR QUALITY ROOF SEAMERS FOR SEAMER RENTALS. THESE ARE THE ONLY AEP SPAN CERTIFIED SEAMER SUPPLIERS.

SEAMING CAPABILITIES:

SPAN-LOK HP:

PRIOR TO SEAMING (SHOWN AT CLIP) — COMPLETED SEAM

SPAN-LOK / SPANSEAM:

PRIOR TO SEAMING (SHOWN AT CLIP) — COMPLETED SEAM (SPAN-LOK) — COMPLETED SEAM (SPANSEAM)

SEAMER OPERATION – IMPORTANT NOTES
ALWAYS ATTACH SAFETY HOOK TO PREVENT SEAMER FROM FALLING OFF ROOF.

REMOVE ANY PROTECTIVE PLASTIC FILM FROM PANELS PRIOR TO SEAMING.

ALL CLIPS REQUIRE HAND CRIMPING PRIOR TO SEAMING TO ENSURE PROPER PANEL INSTALLATION AND TO REDUCE POTENTIAL FOR PANEL SCRATCHING. FOR SPANSEAM 90° HAND CRIMP FIRST 15" OF PANEL END, AND 180° HAND CRIMP FIRST 4" OF PANEL END, BEFORE SETTING ELECTRIC SEAMER IN PLACE.

DO NOT RUN SEAMER PAST END OF PANELS; DOING SO INCREASES THE RISK FOR PERSONAL INJURY AND/OR PROPERTY DAMAGE. THIS IS ESPECIALLY TRUE AT EAVES, ON HIGH SLOPES, OR AT OTHER COMMON RISK AREAS.

DO NOT RUN SEAMER BEYOND UPPER END OF PANEL OR ONTO ANY PREVIOUSLY SEAMED AREA. NEVER RUN THE SEAMER WITHIN 6" OF THE PANEL END OR PREVIOUSLY SEAMED AREA; FINISH WITH A HAND CRIMPER.

MORE DETAILED SEAMING INSTRUCTIONS ARE AVAILABLE FROM THE SEAMER SUPPLIERS.

AEP SPAN

SPANSEAM
(W/ LOW CLIP)

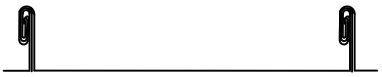

PANEL SEAMING

SPS-LOW-27

REV. 1/8/21

DESIGN CAUTION:
ROOF SLOPE TRANSITIONS SUCH AS FASCIAS MAY ESTABLISH AN UNWANTED POINT OF PANEL FIXITY.

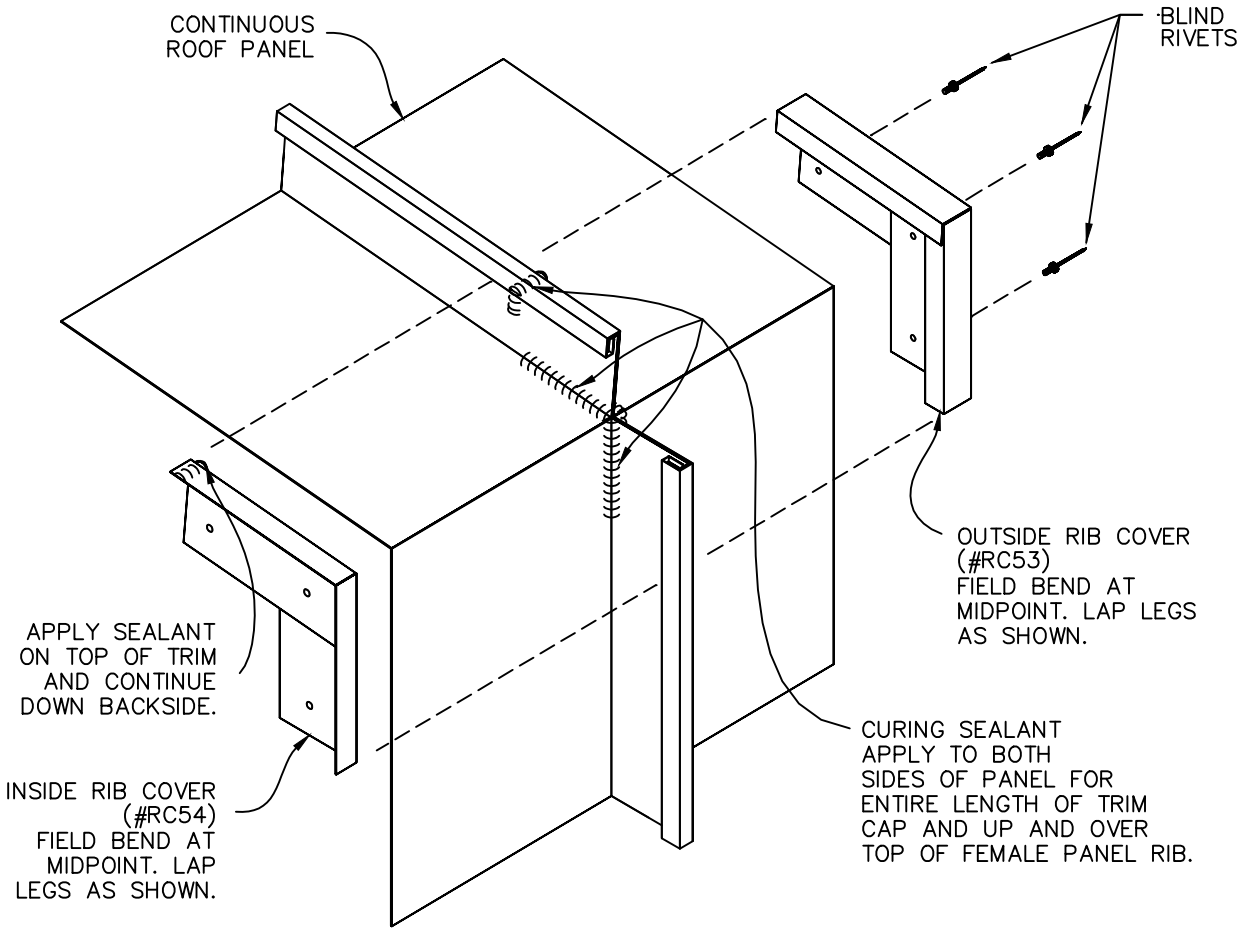

APPLY NON-SKINNING BUTYL SEALANT BETWEEN PANELS AT FIELD CUT. REFER TO EAVE DETAIL FOR LOCATION OF SEALANT. BEADS REQUIRED ON BOTH SIDES OF CUT.

NOTE:
THIS DETAIL NOT RECOMMENDED IN SNOW CLIMATES.

AEP SPAN

SPANSEAM
(W/ LOW CLIP)

RIB COVER

SPS-LOW-28

REV. 9/23/26

ROOF JACK

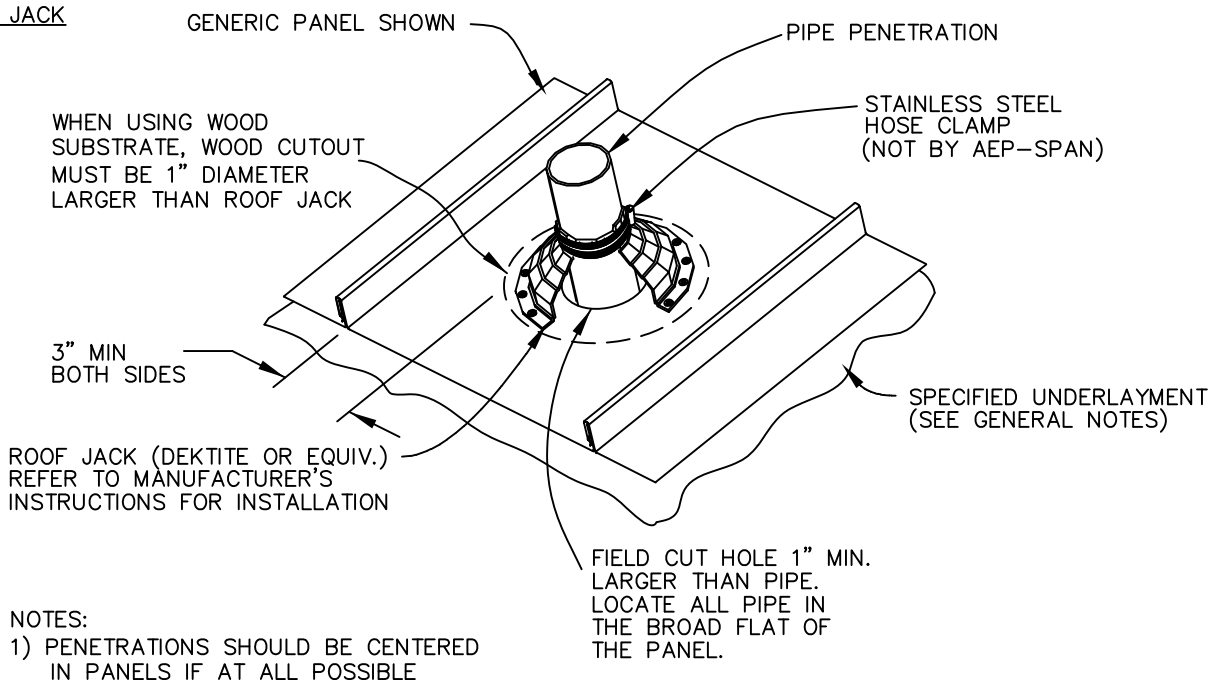

NOTES:
1) PENETRATIONS SHOULD BE CENTERED IN PANELS IF AT ALL POSSIBLE
2) SUBSTRATE MUST BE CUT OUT ENOUGH SO THAT ROOF JACK IS ONLY ATTACHED TO ROOF PANEL.

ROOF CURB

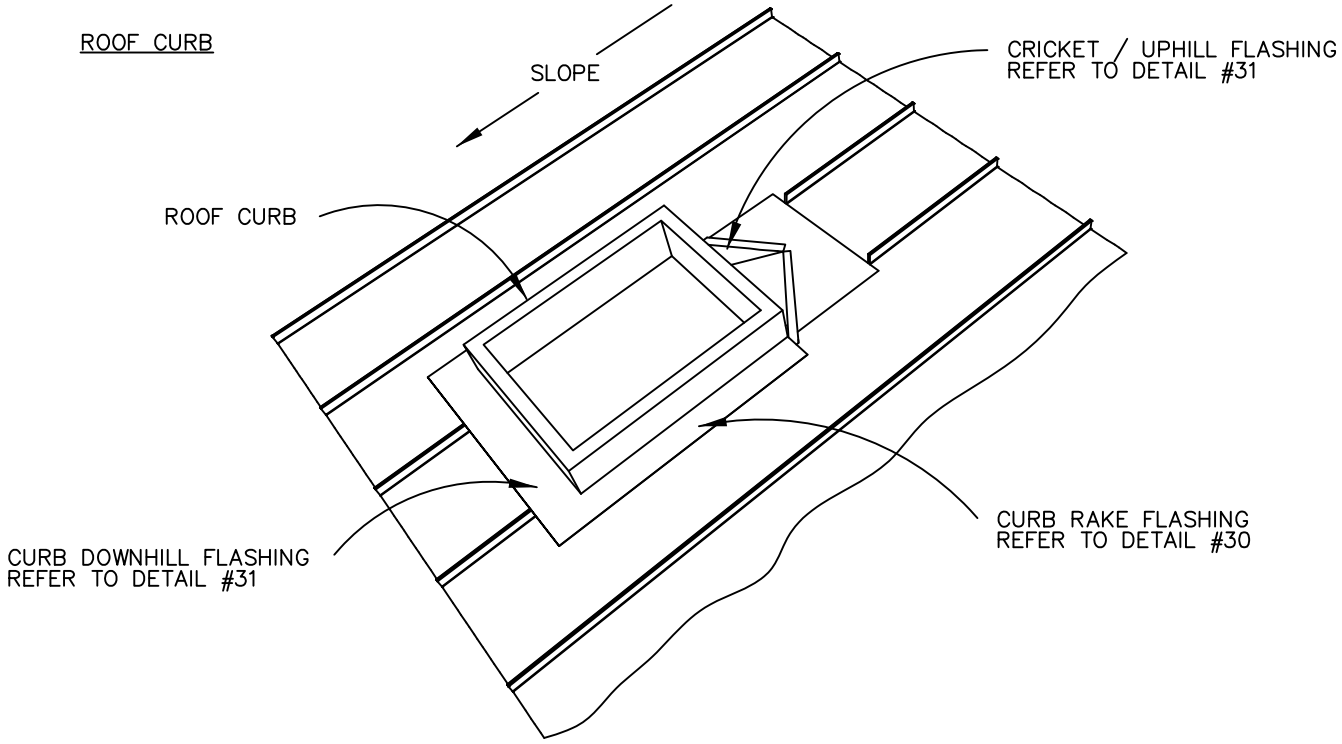

AEP SPAN

SPANSEAM
(W/ LOW CLIP)

ROOF PENETRATIONS

SPS-LOW-29

REV. 1/8/21

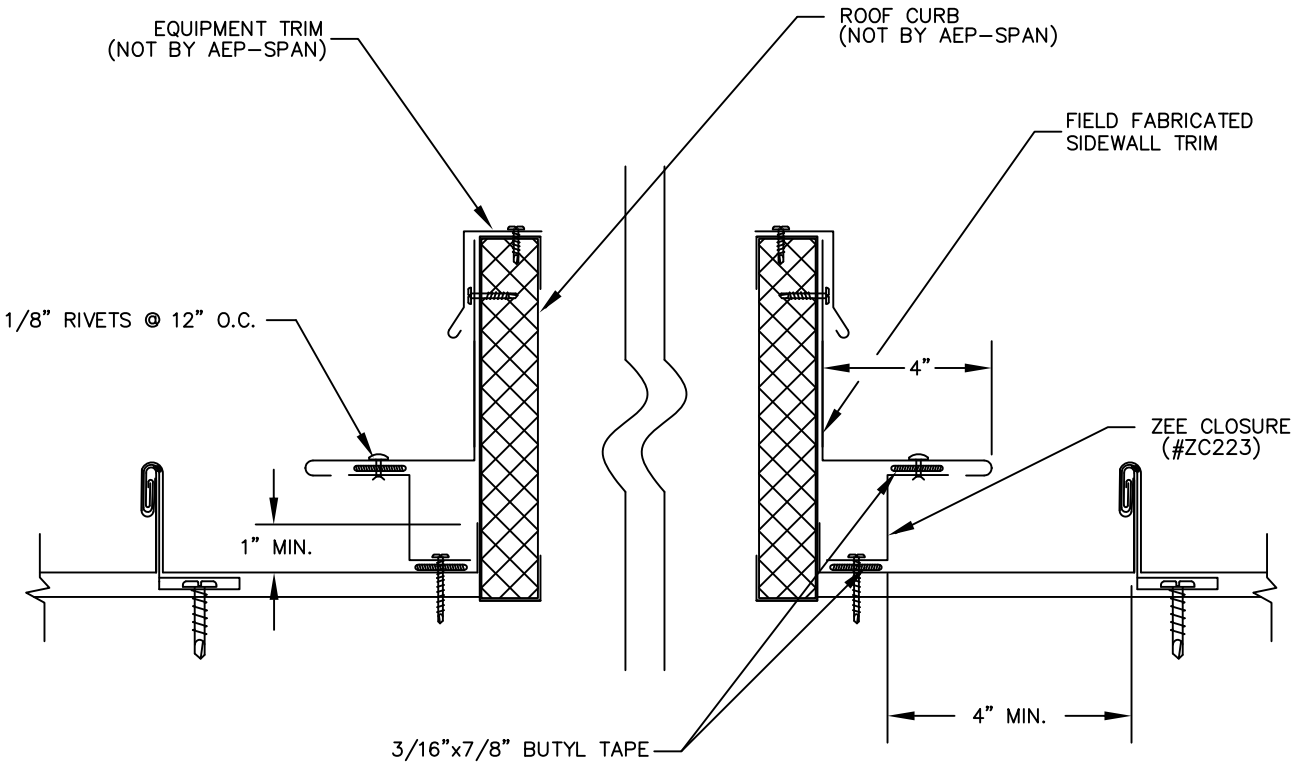

AEP SPAN

SPANSEAM
(W/ LOW CLIP)

ROOF CURB
(RAKE FLASHING)

SPS-LOW-30

REV. 1/8/21

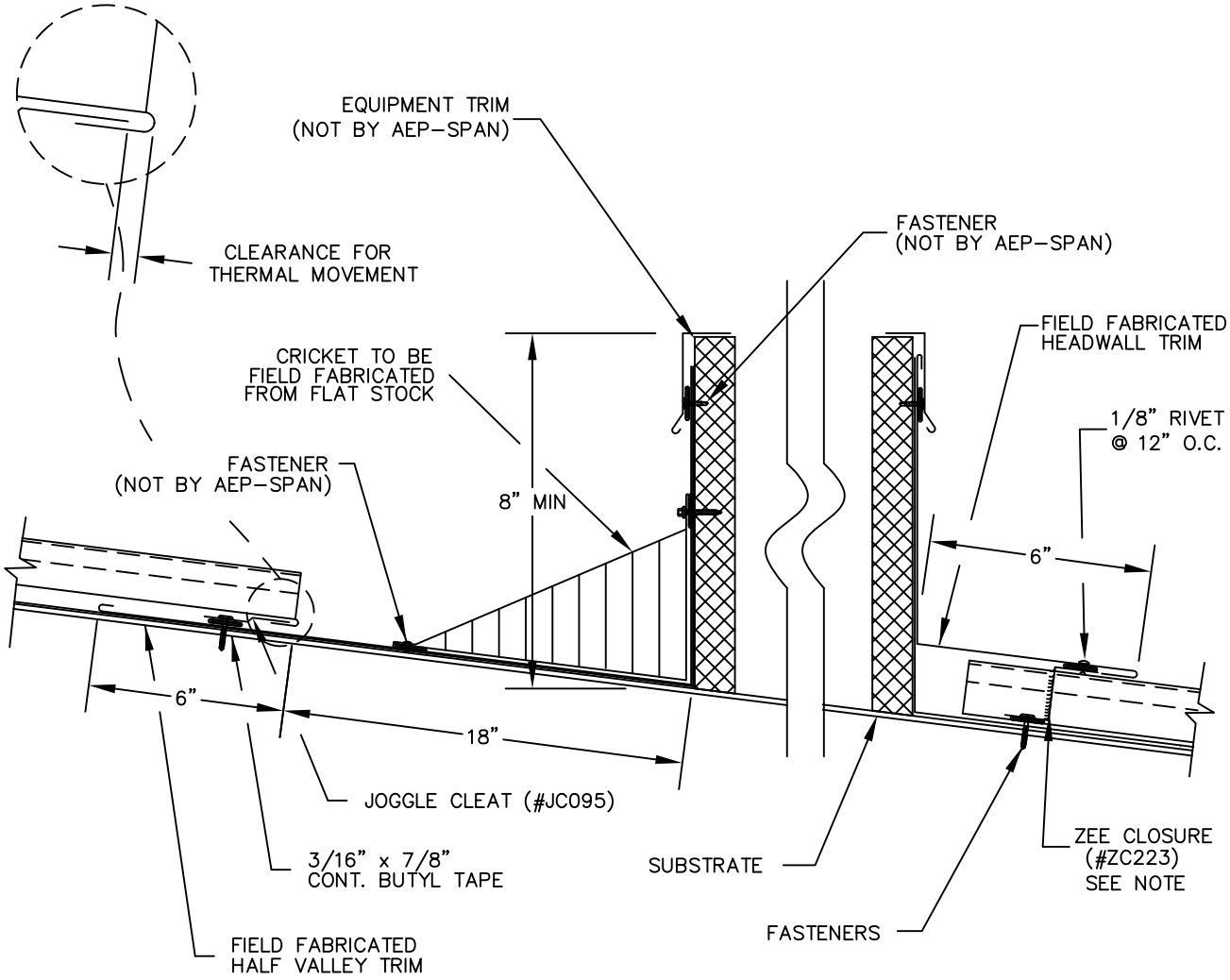

NOTE:
REFER TO HEADWALL DETAIL FOR ADDITIONAL INFORMATION REGARDING PROPER INSTALLATION OF THIS ZEE CLOSURE.

AEP SPAN

SPANSEAM
(W/ LOW CLIP)

ROOF CURB (UPHILL / DOWNHILL DETAIL)

SPS-LOW-31

REV. 1/8/21

MANUFACTURING FACILITY:

Sacramento, California
2110 Enterprise Boulevard
West Sacramento, CA 95691

Tacoma, Washington
2141 Milwaukee Way
Tacoma, WA 98421

CUSTOMER SERVICE:
800-733-4955

Visit us at:
www.aepspan.com

AEP SPAN

©2026 ASC Profiles LLC. All rights reserved.